Slim profile

The W4G4 Series plug-in manifold has been upgraded in all performance areas, including installation area, workability, life, and power consumption.

Drive cylinders up to 125 in diameter

MW4GB4-T10

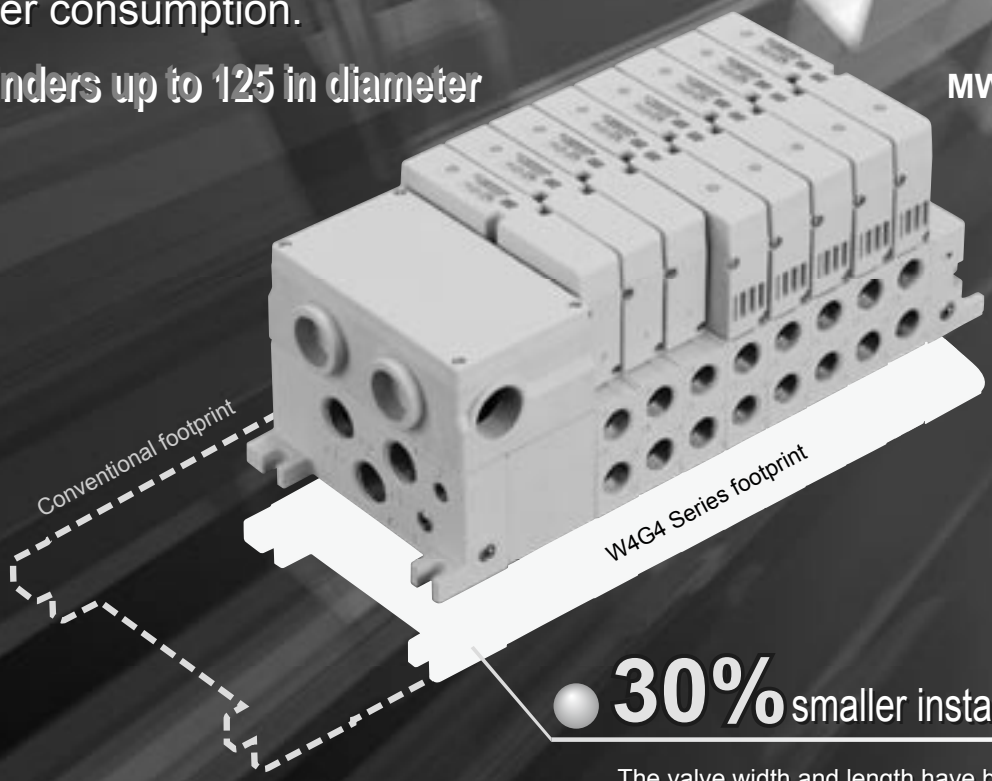

30% smaller installation area

The valve width and length have been decreased to make the manifold more compact, 30% smaller than conventional.

40% lower power consumption

Major energy conservation is realized using a 1 W coil. (DC specifications)

Unrestricted layout of wiring blocks

The wiring block can be selected from the right (right specifications) or left (left specifications) of the manifold.

Easily expanded stations

Connection between the manifold blocks enables valve blocks to be expanded easily without extra work.

Connection between the manifold and blocks enables valve blocks to be expanded easily without extra work.

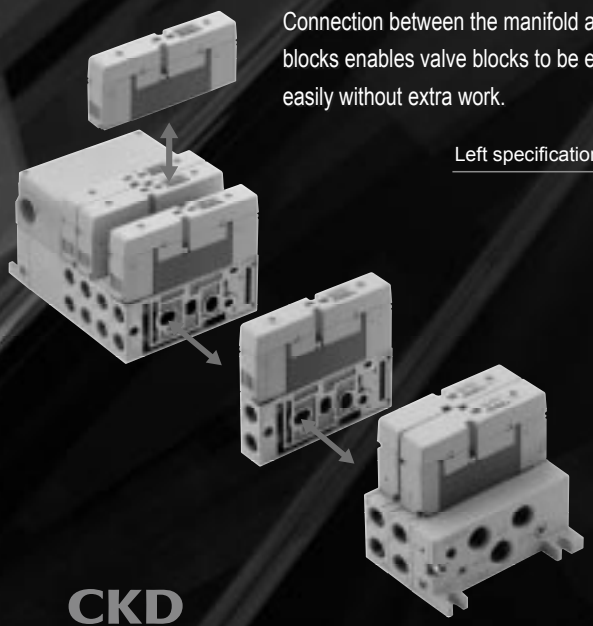

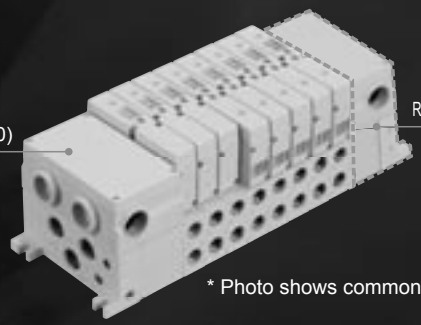

* Photo shows common gland.

PLUG-IN MANIFOLD W4G4 SERIES

W4G4 Series

CKD Green Technology

Upgraded: Operability
Upgraded: Safety
Upgraded: Reliability
Upgraded: Durability

Improved safety and reliability

A rubber cover on the manual button prevents dirt, etc., from getting caught, eliminating mulfunction.

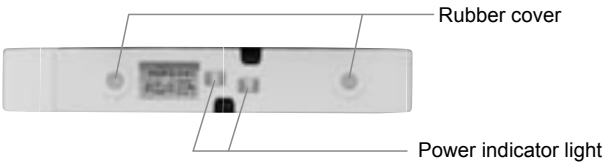

Improved maintenance

The new pilot air OFF function makes it easy to service and inspect the device.
(M7 option)

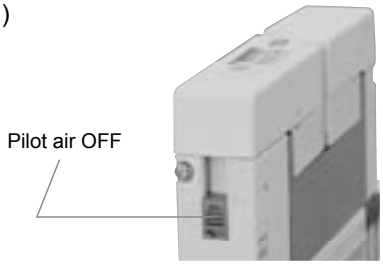

2-color indicator

Orange (solenoid a) and green (solenoid b) are used for the power lamp.

Greatly extended life

Life is now even longer with the improved sliding section and packing, etc.

Ample wire connections

CC-Link, DeviceNet, UNIWIRE, UNIWIRE H, a common gland, and an I/O cable connector (separate wiring) have been prepared for serial transmission.

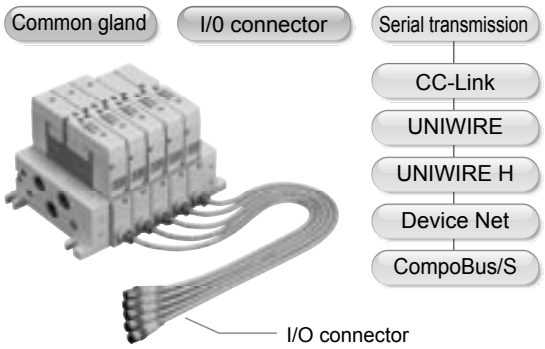

Protective structure equivalent to IP65

A dust-resistant jet-proof structure equivalent to IP65 is used to enable operation in harsh environments.

RoHS Directive compliant

This eco-friendly design complies with RoHS Directives.

RoHS

Improved design

The new white color provides a refreshing touch.

Easy, smooth piping

The pipe coupling is flush with no protruding valves, so rotating tools such as wrenches are used easily, improving piping work efficiency.

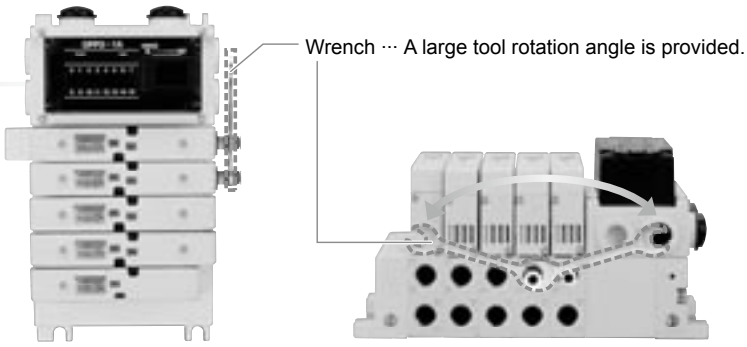

Series variation / appearance			Model no.		Position No. of solenoid JIS symbol	Valve performance: Flow characteristics C ($dm^3/(s \cdot bar)$) Note 1	Valve performance: Applicable cylinder bore size	Voltage: 100 VAC (1)	Voltage: 24 VDC (3)	Voltage: 12 VDC (4)	Voltage: 110 VAC (5)
Discrete	Sub-base side porting	W4GB4*0 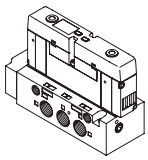	**W4GB4**		● 5 port valve 2-position single solenoid a 4 2 (A) (B) 5 1 3 (R1) (P) (R2) 2-position double solenoid a 4 2 (A) (B) b 5 1 3 (R1) (P) (R2) 3-position all ports closed a 4 2 (A) (B) b 5 1 3 (R1) (P) (R2) 3-position A/B/R connection a 4 2 (A) (B) b 5 1 3 (R1) (P) (R2) 3-position P/A/B connection a 4 2 (A) (B) b 5 1 3 (R1) (P) (R2)	To 7.3	To ø125	●	●	●	●
	Sub-base back porting	W4GZ4*0 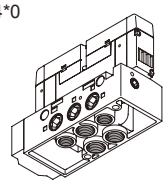	**W4GZ4**					●	●	●	●
Individual wiring manifold	Sub-base side porting	MW4GB4*0 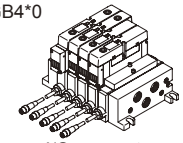 I/O connector (R1)	**MW4GB4 (NW4GB4)**	Individual wiring (-R1)		To 8.3	To ø125		●	●	
	Sub-base back porting	MW4GZ4*0 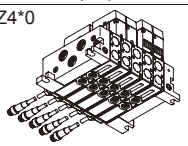 I/O connector (R1)	**MW4GZ4 (NW4GZ4)**						●	●	
Reduced wiring manifold	Sub-base side porting	MW4GB4*0 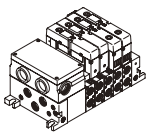 Common gland (T10) 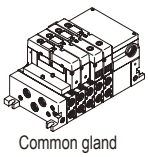 Common gland (T10R) 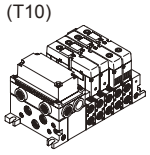 Serial transmission (T6*) 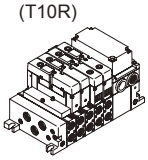 Serial transmission (T6*R)	**MW4GB4 (NW4GB4)**	Common gland Left (-T10) Right (-T10R)		To 8.3	To ø125	●	●	●	●
				Serial transmission Left (-T6*) Right (-T6*R)					●		
	Sub-base back porting	MW4GZ4*0 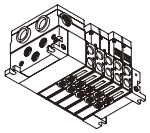 Common gland (T10) 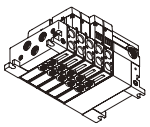 Common gland (T10R) 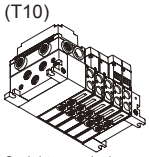 Serial transmission (T6*) 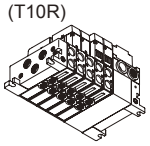 Serial transmission (T6*R)	**MW4GZ4 (NW4GZ4)**	Common gland Left (-T10) Right (-T10R)		To 8.3	To ø125	●	●	●	●
				Serial transmission Left (-T6*) Right (-T6*R)					●		

Note 1: Effective sectional area S and sonic conductance C are converted as S ≒ 5.0 x C.

Protective structure	Solenoid position						A/B piping port									Electric connection				Page
	2-position		3-position			Mix	Push-in joint			Female thread						Gland	I/O connector	Common gland	Serial transmission	
	Single solenoid	Double solenoid	All ports closed	A/B/R connection	P/A/B connection		ø8	ø10	ø12	Rc 1/4	Rc 3/8	G 1/4	G 3/8	NPT 1/4	NPT 3/8					
							C8	C10	C12	08	10	08G	10G	08N	10N	Blank	R1	T10	T6*	
IP65	●	●	●	●	●					●	●	●	●	●	●	●	●			532
IP65	●	●	●	●	●					●	●	●	●	●	●	●	●			532
IP65	●	●	●	●	●	●	●	●	●	●	●	●	●	●	●		●			538
IP65	●	●	●	●	●	●				●		●		●			●			538
IP65	●	●	●	●	●	●	●	●	●	●	●	●	●	●	●			●		542
IP65	●	●	●	●	●	●	●	●	●	●	●	●	●	●	●				●	
IP65	●	●	●	●	●	●				●		●		●				●		542
IP65	●	●	●	●	●	●				●		●		●					●	

MN3E0 MN4E0
4GA/B
M4GA/B
MN4GA/B
4GA/B (Master)
W4GA/B2
W4GB4
MN3S0 MN4S0
4TB
4L2-4/ LMF0
4SA/B0
4SA/B1
4KA/B
4F
PV5G/ CMF
PV5/ CMF
3MA/B0
3PA/B
P/M/B
NP/NAP/ NVP
4F*0E
HMV HSV
2QV 3QV
SKH
PCD/ FS/FD
Ending

Electric connection

Discrete

Blank Gland

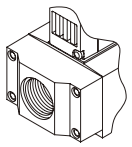

R1 I/O connector (DC)

● **Lead wire length** 500 mm

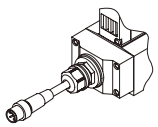

Individual wiring manifold

R1 I/O connector (DC)

● **Lead wire length** 500 mm

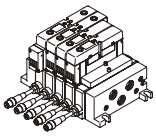

Reduced wiring manifold

T10 Common gland (Left)

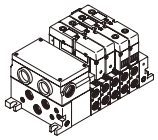

T10R Common gland (Right)

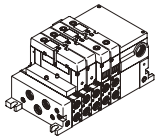

T6* Serial transmission (Left)

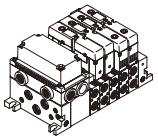

T6*R Serial transmission (Right)

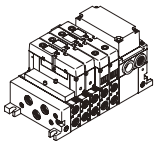

Manual override (Provided as standard)

M Non-locking Manual override

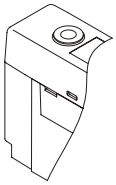

Other options

M7 Manual override with OFF function

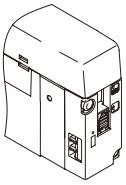

● **Locking**
Pilot air OFF when slide upwards.
Original position during normal use.

K External pilot

Individual circuit specifications of main pressure and pilot pressure.

A Coolant proof

Select for measures against entry of coolant.

F A/B port filter integrated

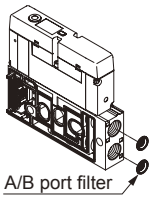

Z1 Air supply spacer

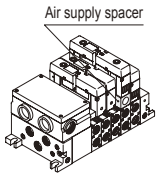

Z3 Exhaust spacer

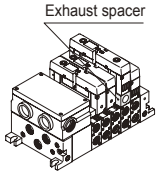

Electric connection circuit diagram (Inside solenoid valve)

With light and surge suppressor (provided as standard)

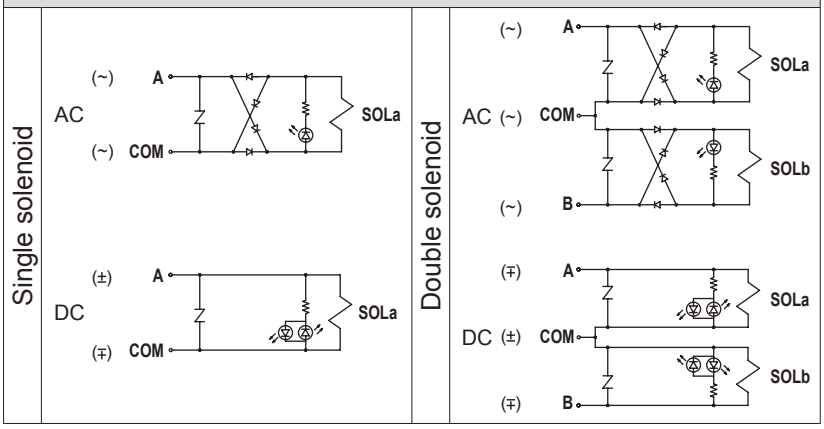

Pneumatic components

Safety precautions

Always read this section before starting use.
Refer to Intro 63 for precautions of general valves.

5 port pilot operated valve W4G4 Series

Design & Selection

1. Working environment

CAUTION

IP65 (IEC60529 (IEC529: 1989-11)) standards are applied to the test. Avoid use in condition which water or coolant could directly contact the valve.

Explanation of protection property symbols and examination method of IP65

● Protective structure

Note: IP-65 is a standard as followings.

■ IEC (International Electrotechnical Commission) standards (IEC60529 (IEC529: 1989-11))

IP-**

Protection property symbols (International Protection)

1st characteristic number (protection grade for foreign solid)

Grade	Degree of protection	
6	Dust proof type 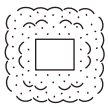	Powder and dust do not admit into the inside.

2nd characteristic number (Protective class against entry of water)

Grade	Degree of protection		Overview of test method (fresh water is used)
5	Protection for jet 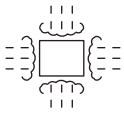	No harmful effects occur even when water is sprayed with nozzles from all directions.	Using the following test device, spray water for 1 minute per 1 m^2 of test sample (exterior) surface area from all directions, for a total of 3 minutes or more. 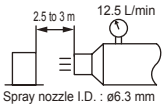

2. Alternating current voltage specifications

CAUTION

■ AC voltage specifications are built into all wave rectification circuits.
When using SSR to turn the solenoid valve ON and OFF, solenoid valve recovery could fail. Take care when selecting the SSR. (Consult with the relay or PLC manufacturer.)

3. Surge suppressor

CAUTION

■ "The surge suppressor enclosed with the solenoid valve is to protect the output contact for that solenoid valve's drive. There is no significant protection for other devices in the area, and the surge may cause damage or malfunctions. Surge generated by other devices could be absorbed and cause damage such as burning. Care must be taken for points below."

● The surge suppressor limits solenoid valve surge voltage, which can reach several hundred volts, to a lower voltage level withstandable by the output contact. Depending on the output circuit used, this may be insufficient and could result in damage or malfunction. Check whether the surge suppressor can be used by the surge voltage limit of the solenoid valve in use, the output device's withstand pressure and circuit structure, and by the degree of return delay time. If necessary, provide other surge measures. Solenoid valves with surge suppressors suppress the reverse voltage surge generated during OFF operation to the levels below.

Rated voltage	Reverse voltage value when OFF
12 VDC	27 V
24 VDC	47 V

● When using the NPN output unit, a surge voltage equivalent to the voltage above plus the power voltage surge could be applied. Provide contact protection circuit.

(Output transistor protection circuit parallel setting example 1)

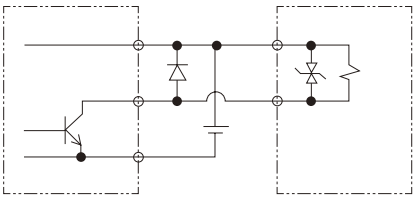

(Output transistor protection circuit parallel setting example 2)

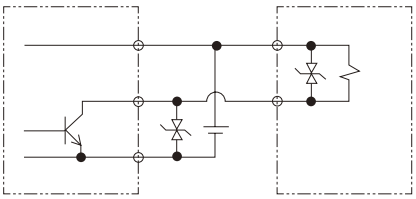

Design & Selection

- If another device or solenoid valve is connected in parallel to the solenoid valve, reverse voltage surge generated when the solenoid valve is off is applied to these devices. Even when using the solenoid valve with a 24 VDC surge suppressor, the surge voltage could reach several tens of volts depending on the model. This revere polarity voltage could damage devices connected in parallel or cause them to malfunction. Avoid parallel connection of devices suspected of reversing polarity voltages, e.g., LED indicators. When driving several solenoid valves in parallel, the surge from other solenoid valves could enter the surge suppressor of one solenoid valve with a surge suppressor. Depending on the current value, that surge suppressor could burn. When driving several solenoid valves with surge suppressors in parallel, surge current could concentrate at the surge suppressor with the lowest limit voltage and cause similar burning. Even if the solenoid valve type is the same, the surge suppressor's limit voltage can be inconsistent, and in the worst case, could result in burning. Avoid driving several solenoid valves in parallel.
- The surge suppressor incorporated in the solenoid valve often short-circuits if damaged by overvoltage or overcurrent from a source other than the solenoid valve. If the surge suppressor fails, if a large current flows when output is on, the output circuit or solenoid valve could be damaged or ignite. Do not keep power on in a faulty state. Provide an overcurrent protection circuit on the power or drive circuit or use a power supply with overcurrent protection so that a large current does not flow continuously.

4. Partition plug

■ When using partition plug, consult with CKD sales office.

Installation & Adjustment

1. Common

⚠ CAUTION

■ Port indication

Port positions such as 1P and 4A, etc., are indicated in accordance with ISO and JIS standards.

Applications	ISO standards	JIS standards
Supply port	1	P
Output port	4	A
Output port	2	B
Exhaust port	5	R1
Exhaust port	3	R2
Pilot air supplying port	12/14	PA
Pilot exhaust port	82/84	PR

- Any valve mounting attitude is permissible. Check the port symbol to pipe as a reverse action such as cylinder, etc., is not created.

2. Port filter

⚠ CAUTION

■ Port filter is used to prevent foreign materials from entering, and problems in a valve. This is not for improving quality of compressed air, so read the warning and the cautions in the Introduction very well, then implement installation and adjustment.
Do not remove or force the port filter.
The filter could deform and result in problems. If contaminants and foreign materials are found on the filter surface, flash lightly, or remove them by tweezers, etc.

Example of integrating A/B port filter

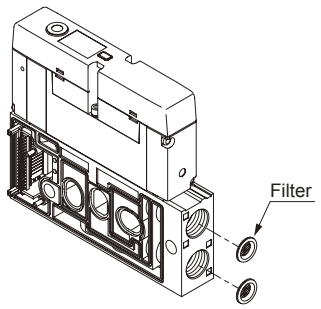

For female thread type

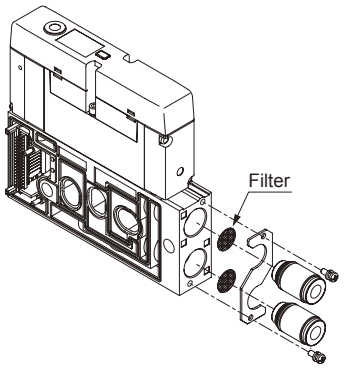

For cartridge joint

During Use & Maintenance

1. Valve replacement

⚠ CAUTION

■ Check that the gasket does not fall off when replacing and installing the valve.

Mounting bolt	Thread size	Hexagonal wrench size	Proper tightening torque (N·m)
Hexagon socket head bolt	M4	Nominal 3	2.4 to 2.6

2. Pilot air OFF function (M7)

⚠ CAUTION

■ The supply of pilot air is forcibly stopped when power is on, so the main valve can be switched even when power is on.
When using the OFF function, caution is required because the cylinder moves immediately when using the 2-position single and 3-position A/B/R connection or P/A/B connection.

Output port destination list

Solenoid position			OFF function (energized side M7 switch)		De-energized side manual
			No operation	Operation (OFF)	Operation
2-position	Single solenoid	a side sol. energizing	4 (A) →	2 (B)	-
	Double solenoid	a side sol. energizing	4 (A)	4 (A) →	2 (B)
		b side sol. energizing	2 (B)	2 (B) →	4 (A)
3-position	All ports closed	a side sol. energizing	4 (A)	4 (A) →	2 (B)
		b side sol. energizing	2 (B)	2 (B) →	4 (A)
	A/B/R connection	a side sol. energizing	4 (A)	- →	2 (B)
		b side sol. energizing	2 (B)	- →	4 (A)
	P/A/B connection	a side sol. energizing	4 (A)	4 (A)/2 (B) →	2 (B)
		b side sol. energizing	2 (B)	4 (A)/2 (B) →	4 (A)

■ How to operate M7 switch

❶ When using OFF function
Slide the M7 switch in the direction of the arrow until it stops.
This is a lock switch, so the OFF function is not reset even if the switch is released.

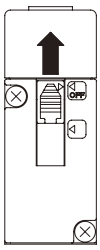

❷ During normal use
Return the M7 switch to the original position.

WARNING
When conducting manual operations, make sure that there are no people near the moving cylinder.

3. How to replace cartridge joint

⚠ CAUTION

Check procedures before changing the push-in joint size. Problems such as air leakage could occur if the joint is not installed properly or if mounting threads are not tightened sufficiently.

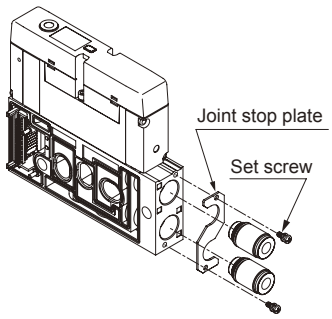

① Remove the set screw.
② Pull out the joint stopper plate and joint together.
③ Align the stopper plate with the groove on the replacement joint, and assemble temporarily.
④ Assemble the stopper plate and joint together, and tighten the set screw. Pull on the joint to confirm that it is properly installed. (Tightening torque: 0.55 to 0.65 N·m)

Cartridge type push-in joint model no.

Model	Part name	Model no.
W4G4	ø8 straight	4G4-JOINT-C8
	ø10 straight	4G4-JOINT-C10
	ø12 straight	4G4-JOINT-C12

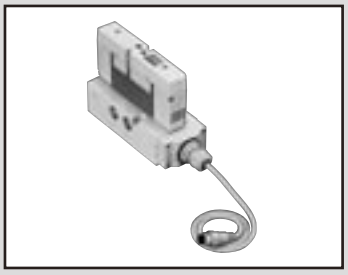

Discrete
sub-base side porting and back porting

W4GB4/W4GZ4 Series

● Applicable cylinder bore size: ø63 to ø125

CE (Subject: DC voltage) Refer to Intro 17 for details. RoHS

Common specifications

Descriptions	W4GB4/W4GZ4
Type of valve / operation method	Pilot operated soft spool valve
Working fluid	Compressed air
Max. working pressure MPa	1.0
Min. working pressure MPa	0.2
Withstanding pressure MPa	1.50
Ambient temperature °C	-5 to 55 (no freezing)
Fluid temperature °C	5 to 55
Manual override	Non-locking type (standard)
Lubrication Note 1	Not required
Protective structure Note 2	Dust proof / jet-proof (IP65 or equivalent)
Vibration / impact m/s^2	49 or less / 294 or less
Working environment	Containing corrosive gas is impermissible.

Note 1:Use the turbine oil Class 1 ISO VG32 if lubricated.
Excessive lubrication results in instable operation.
Note 2:IP65 (IEC60529 (IEC529: 1989-11)) standards are applied to the test.
Refer to page 529 for details.
Note 3:The working pressure range is 0 to 1.0 MPa when the external pilot (option symbol: K) is selected.Set the external pilot pressure between 0.2 to 1.0 MPa.

Electric specifications

Descriptions		W4GB4/W4GZ4
Rated voltage V	DC	12, 24
	AC	100 (50/60Hz) 110 (50/60Hz)
Rated voltage fluctuation range		±10%
Holding current A	12 VDC	0.100
	24 VDC	0.050
	100 VAC	0.024
	110 VAC	0.024
Power consumption Note 4 W	12 VDC	1.2
	24 VDC	1.2
Apparent power VA	100 VAC	2.4
	110 VAC	2.6
Heat proof class		B (molded coil)

Note 4:Surge suppressor and indicator are provided as standard.

JIS symbol

● 5 port valve

2-position single solenoid

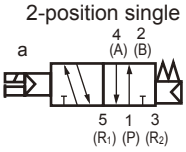

2-position double solenoid

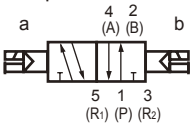

3-position all ports closed

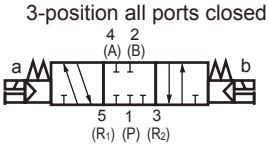

3-position A/B/R connection

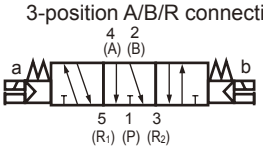

3-position P/A/B connection

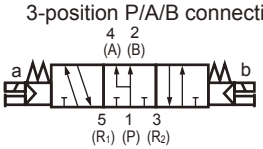

Individual specifications

Descriptions		W4GB4	W4GZ4
Port size	P/A/B port	Rc1/4, Rc3/8, G1/4, G3/8, NPT1/4, NPT3/8	
	R port	Rc1/4, Rc3/8, G1/4, G3/8, NPT1/4, NPT3/8	Rc1/4, G1/4, NPT1/4
	PA/PR port	Rc1/8, G1/8, NPT1/8	Rc1/8, G1/8, NPT1/8

Descriptions			W4GB4/W4GZ4	
			When ON	When OFF
Response time ms	2-position	Single solenoid	30	38
		Double solenoid	30	-
	3-position	A/B/R connection	50	58

Response time is the value at supply pressure 0.5 MPa, 20°C and oilless. The value will change based on quality of pressure and oil.

Descriptions			Gland	I/O connector
Weight g	2-position	Single solenoid	701	755
		Double solenoid	745	799
	3-position	All ports closed	777	831

Flow characteristics

Model no.	Solenoid position		P → A/B		A/B → R	
			C (dm^3/ (s·bar))	b	C (dm^3/ (s·bar))	b
W4GB4	2-position		7.7	0.31	7.3	0.16
	3-position	All ports closed	6.6	0.19	6.4	0.21
		A/B/R connection	6.5	0.15	7.3	0.04
		P/A/B connection	7.4	0.21	7.1	0.16

Note 1: Effective sectional area S and sonic conductance C are converted as S ≒ 5.0 x C.
Note 2: Flow characteristics are values for port size Rc3/8.

Coolant proof specifications

Can be selected with "E" option "A" in How to Order on Page 533.

How to order

● Discrete

W4GB4 3 0 —— 10 - R1 MF - 3

W4GZ4 3 0 —— 10 - R1 M7 - 3

● Only discrete sub-plate

W4GB4 —— SP - 10 - R1 K

W4GZ4 —— SP - 10 - R1 K

Ⓐ Model no. Sub-plate

Ⓑ Solenoid position

Ⓒ Port size

Ⓓ Electric connection

Ⓔ Option

Ⓕ Voltage

Ⓐ Model no.	Discrete		Only discrete sub-plate	
	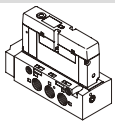		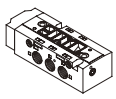	
	W4GB4	W4GZ4	W4GB4	W4GZ4

Symbol	Descriptions	W4GB4	W4GZ4	W4GB4	W4GZ4
Ⓑ Solenoid position					
1	2-position single solenoid	●	●		
2	2-position double solenoid	●	●		
3	3-position all ports closed	●	●		
4	3-position A/B/R connection	●	●		
5	3-position P/A/B connection	●	●		
Ⓒ Port size {1(P), 2(B), 4(A) port}					
08	Rc1/4	●	● Note 1	●	● Note 1
10	Rc3/8	●	● Note 1	●	● Note 1
08G	G1/4	●	● Note 2	●	● Note 2
10G	G3/8	●	● Note 2	●	● Note 2
08N	NPT1/4	●	● Note 3	●	● Note 3
10N	NPT3/8	●	● Note 3	●	● Note 3
Ⓓ Electric connection (light and surge suppressor provided as standard)					
Blank	Gland	●	●	●	●
R1	I/O connector (500 mm for DC) Note 4	●	●	●	●
Ⓔ Option					
M	Non-locking (standard) Note 5	●	●		
M7	Lock with pilot air OFF Note 5, Note 6	●	●		
K	External pilot	●	●	●	●
A	Coolant proof	●	●		
F	A/B port filter	●	●	●	●
Ⓕ Voltage					
1	100 VAC	●	●		
3	24 VDC	●	●		
4	12 VDC	●	●		
5	110 VAC	●	●		

is not available.

⚠ Note on selection guide

Note 1: 3(R2) and 5(R1) ports are Rc1/4 for back porting.
Note 2: 3(R2) and 5(R1) ports are G1/4 for back porting.
Note 3: 3(R2) and 5(R1) ports are NPT1/4 for back porting.
Note 4: Voltage is only DC specifications for an I/O connector.
Note 5: Select either "M" or "M7".
Note 6: Both lock equipment with non-locking manual override and pilot air OFF function are provided.

Kit model no. for gland type

● Cable clamp (with gasket)

Model no.	Descriptions
W4G-OA-W1608C1	This is used to protect a cable from dust and jet.

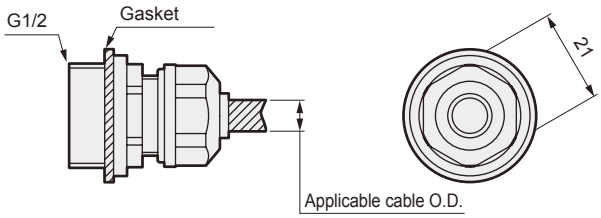

Applicable cable outer diameter : ø6 to ø8
(Reference value)
Cable clamp body tightening torque: 2.0 to 2.4 N·m
Tightening cap tightening torque : 0.5 to 0.7 N·m

Electric connection

Name	Gland	I/O connector (DC)
Symbol	Blank	R1
Shape Terminal arrangement	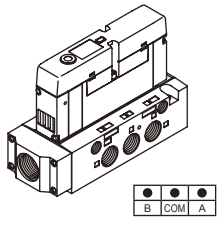	M12 4 pin Male (plug) 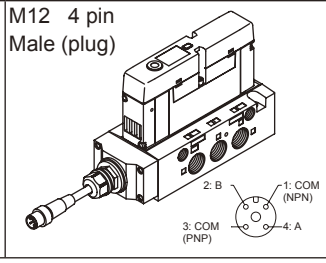

MN3E0
MN4E0
4GA/B
M4GA/B
MN4GA/B
4GA/B (Master)
W4GA/B2
W4GB4
MN3S0
MN4S0
4TB
4L2-4/ LMF0
4SA/B0
4SA/B1
4KA/B
4F
PV5G/ CMF
PV5/ CMF
3MA/B0
3PA/B
P/M/B
NP/NAP/ NVP
4F*0E
HMV
HSV
2QV
3QV
SKH
PCD/ FS/FD
Ending

Dimensions

W4GB410 Side porting

● Gland (blank)

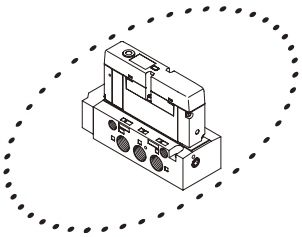

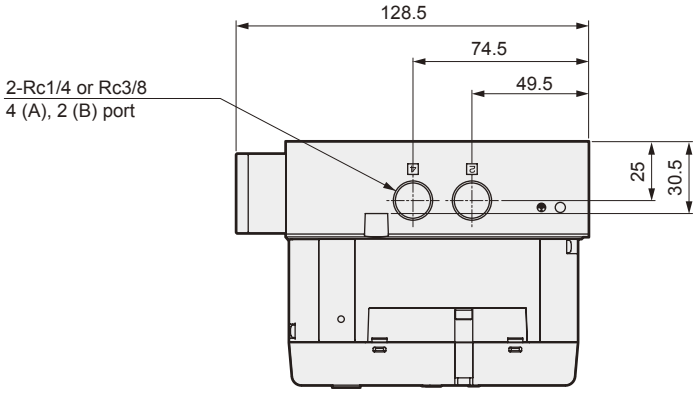

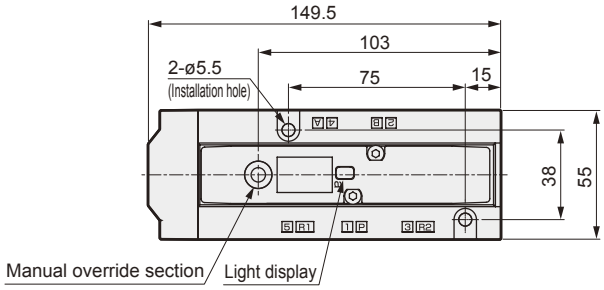

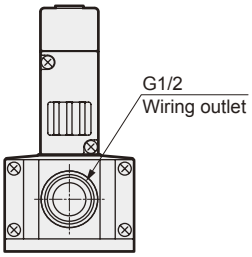

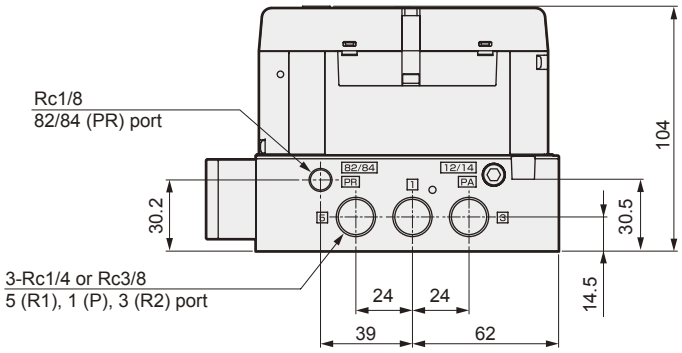

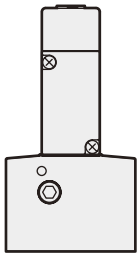

W4GZ410 Back porting

● Gland (blank)

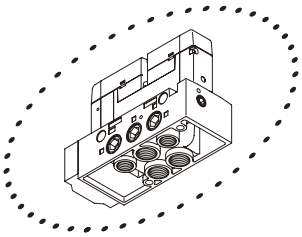

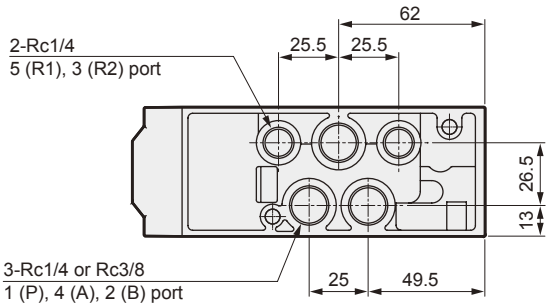

Dimensions

W4GB420 Side porting

● Gland (blank)

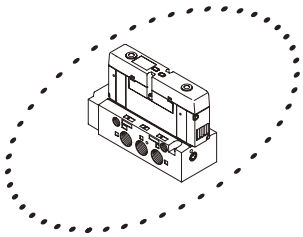

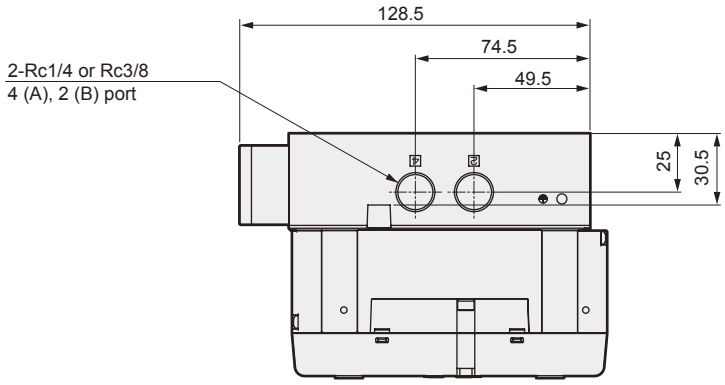

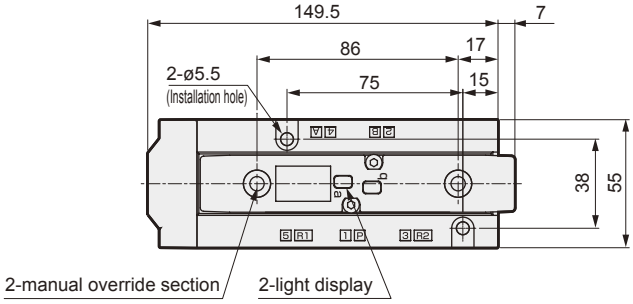

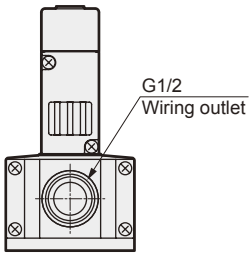

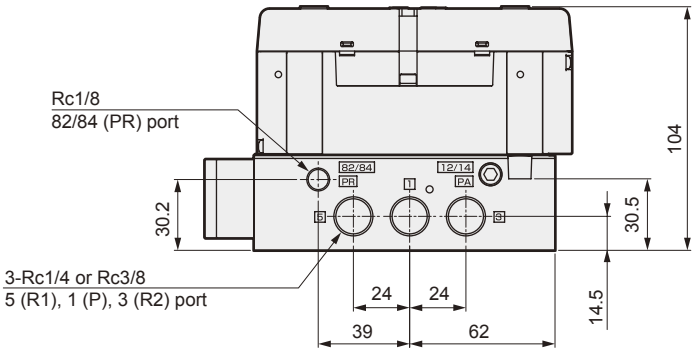

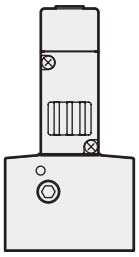

W4GZ420 Back porting

● Gland (blank)

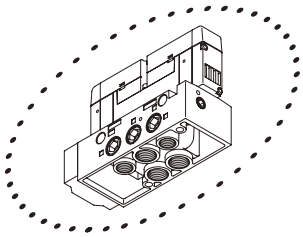

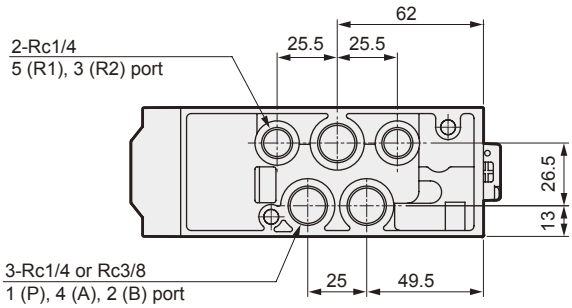

Dimensions

MN3E0
MN4E0
4GA/B
M4GA/B
MN4GA/B
4GA/B (Master)
W4GA/B2
W4GB4
MN3S0
MN4S0
4TB
4L2-4/ LMF0
4SA/B0
4SA/B1
4KA/B
4F
PV5G/ CMF
PV5/ CMF
3MA/B0
3PA/B
P/M/B
NP/NAP/ NVP
4F*0E
HMV
HSV
2QV
3QV
SKH
PCD/ FS/FD
Ending

W4GB$^{3}_{4}_{5}$0 Side porting

● Gland (blank)

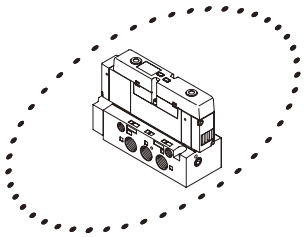

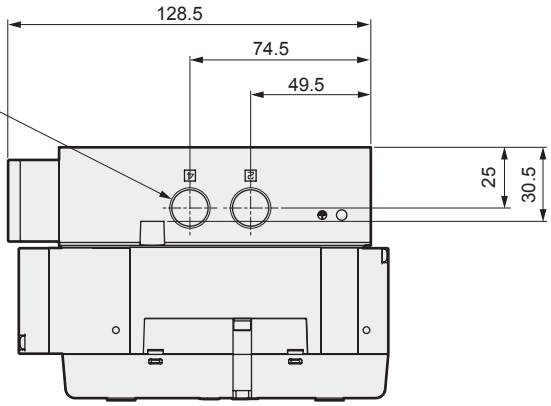

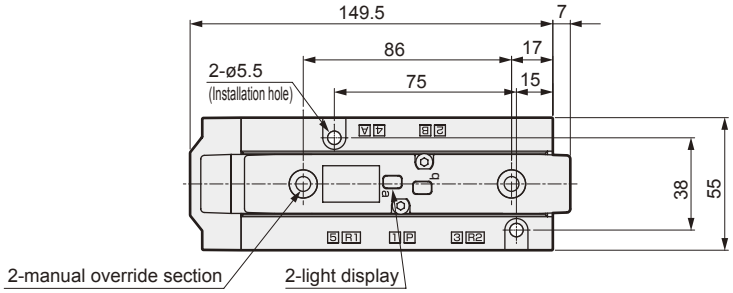

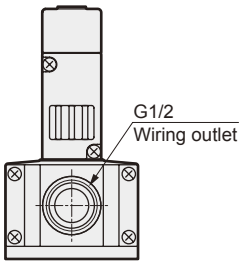

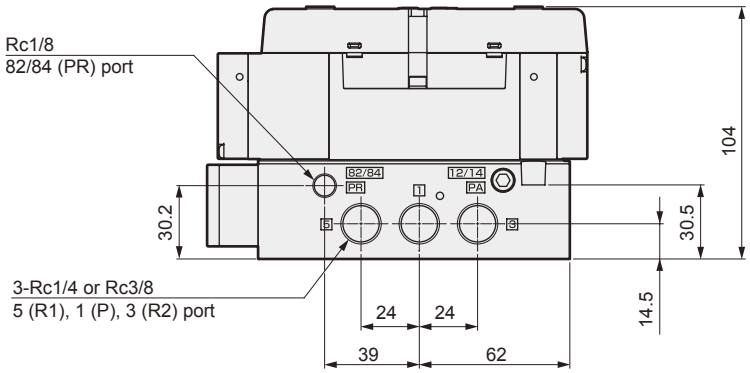

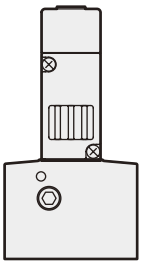

W4GZ$^{3}_{4}_{5}$0 Back porting

● Gland (blank)

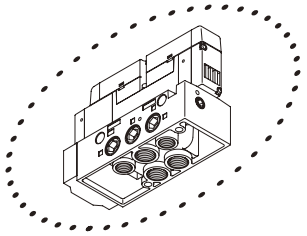

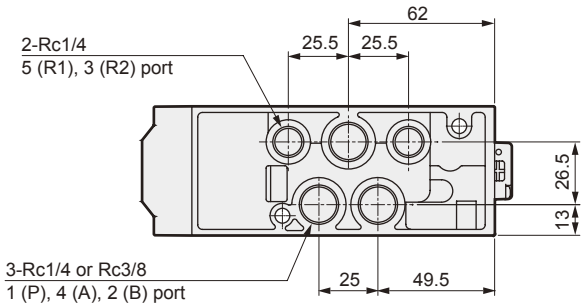

Dimensions

● With pilot air OFF function (M7)

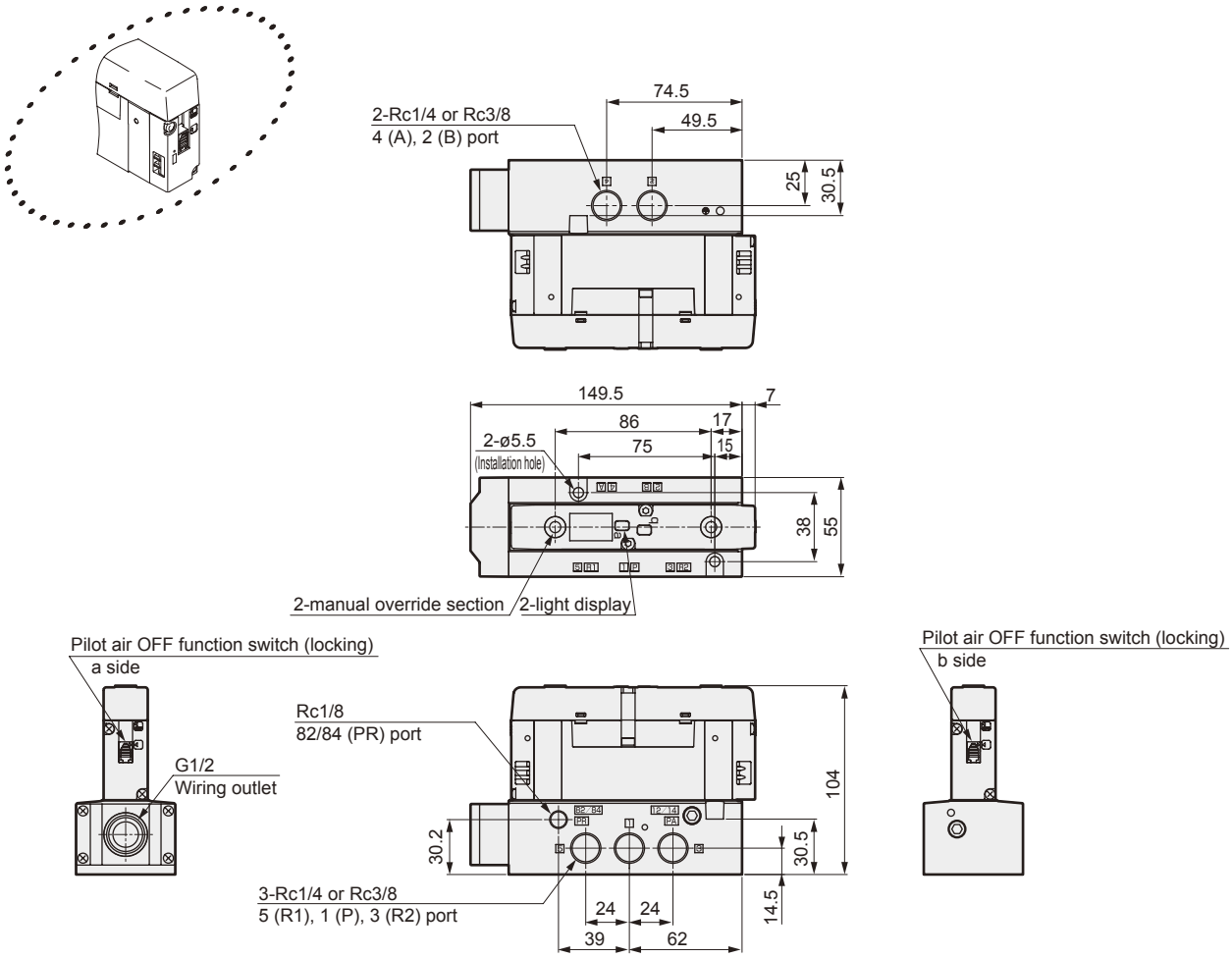

● External pilot (K)

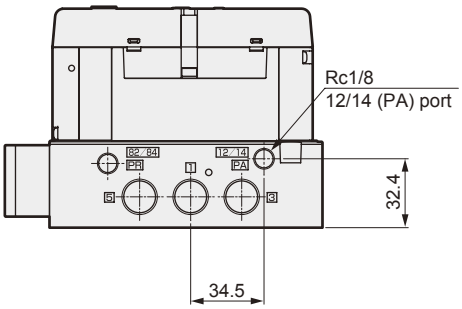

● I/O connector (R1)
Cable: VA-4DBXO5KUG3-CKD276-PG7 (CORRENS)

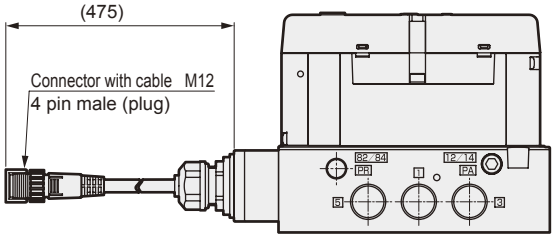

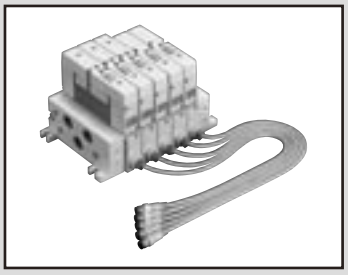

Individual wiring manifold
Sub-base side porting and back porting

MW4G$^{B}_{Z}$4-R1 Series

● Applicable cylinder bore size: ø63 to ø125

CE (Subject: DC voltage) Refer to Intro 17 for details. RoHS

Common specifications

Descriptions	MW4GB4	MW4GZ4
Manifold type	Block manifold	
Air supply and exhaust method	Common supply and common exhaust	
Pilot exhaust method	Main valve and pilot valve individual exhaust	
Piping direction	Sub-base side porting	Sub-base bottom porting
Type of valve / operation method	Pilot operated soft spool valve	
Working fluid	Compressed air	
Max. working pressure MPa	1.0	
Min. working pressure MPa	0.2	
Withstanding pressure MPa	1.5	
Ambient temperature °C	-5 to 55 (no freezing)	
Fluid temperature °C	5 to 55	
Manual override	Non-locking	
Lubrication Note 1	Not required	
Protective structure Note 2	Dust proof / jet-proof (IP65 or equivalent)	
Vibration / impact m/s^2	49 or less / 294 or less	
Working environment	Containing corrosive gas is impermissible.	

Note 1: Use the turbine oil Class 1 ISO VG32 if lubricated.
Excessive lubrication results in instable operation.
Note 2: IP65 (IEC60529 (IEC529: 1989-11)) standards are applied to the test.
Refer to page 529 for details.
Note 3: The working pressure range is 0 to 1.0 MPa when the external pilot (option symbol: K) is selected.Set the external pilot pressure between 0.2 to 1.0 MPa.

Electric specifications

Descriptions		MW4GB4/MW4GZ4
Rated voltage V	DC	12, 24
Rated voltage fluctuation range		±10%
Holding current A	12 VDC	0.100
	24 VDC	0.050
Power consumption W	12 VDC	1.2
Note 4	24 VDC	1.2
Heat proof class		B (molded coil)
Wiring method		I/O connector (for DC)

Note 4: Surge suppressor and indicator are provided as standard.

JIS symbol

● 5 port valve

2-position single solenoid

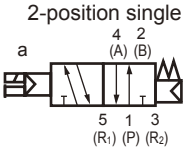

2-position double solenoid

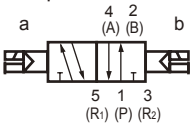

3-position all ports closed

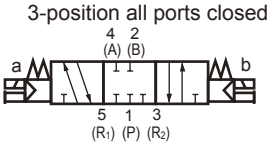

3-position A/B/R connection

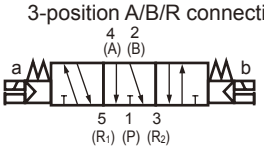

3-position P/A/B connection

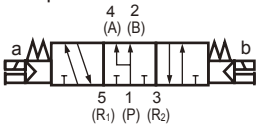

Individual specifications

Descriptions		MW4GB4	MW4GZ4
Maximum station number		16	
Port size	P port	Rc1/2, G1/2, NPT1/2	
	A/B port	Rc1/4, Rc3/8, G1/4, G3/8, NPT1/4, NPT3/8, Push-in joint ø8, ø10, ø12	Rc1/4, G1/4, NPT1/4
	R port	Rc1/2, G1/2, NPT1/2	
	PA/PR port	Rc1/8, G1/8, NPT1/8	

Descriptions			MW4GB4/MW4GZ4	
			When ON	When OFF
Response time ms	2-position	Single solenoid	30	38
		Double solenoid	30	-
	3-position	A/B/R connection	50	58

Response time is the value at supply pressure 0.5 MPa, 20°C and oilless. The value will change based on quality of pressure and oil.

Flow characteristics

Model no.	Solenoid position		P → A/B		A/B → R	
			C (dm^3/ (s·bar))	b	C (dm^3/ (s·bar))	b
W4GB4	2-position		7.4	0.24	7.9	0.30
	3-position	All ports closed	6.4	0.22	7.1	0.32
		A/B/R connection	6.4	0.17	8.3	0.28
		P/A/B connection	7.1	0.16	7.4	0.28

Note 1: Effective sectional area S and sonic conductance C are converted as S ≒ 5.0 x C.
Note 2: Flow characteristics are values for port size Rc3/8.

Coolant proof specifications

Can be selected with "E" option "A" in How to Order on page 539.

How to order

Individual wiring I/O connector

● Manifold model no.

MW4GB4 8 0 - 10 - R1 M - 6 - 3

MW4GZ4 8 0 - 08 - R1 M - 6 - 3

● Discrete valve block with solenoid valve

NW4GB4 1 0 - 10 - R1 M7 — 3

NW4GZ4 1 0 - 08N - R1 M7 — 4

● Discrete solenoid valve

W4GB4 1 9 - 00 — M — 3

Ⓐ Model no. Ⓑ Solenoid position Ⓒ Port size Ⓓ Electric connection Ⓔ Option Ⓕ Station number Ⓖ Voltage

Symbol	Descriptions	Ⓐ Model no. Manifold MW4GB4	Manifold MW4GZ4	Discrete valve block with solenoid valve NW4GB4	NW4GZ4	Discrete solenoid valve W4GB4
		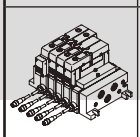		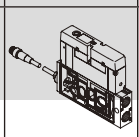		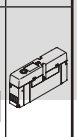
Ⓑ Solenoid position						
1	2-position single solenoid	●	●	●	●	●
2	2-position double solenoid	●	●	●	●	●
3	3-position all ports closed	●	●	●	●	●
4	3-position A/B/R connection	●	●	●	●	●
5	3-position P/A/B connection	●	●	●	●	●
8	Mix manifold	●	●			
Ⓒ Port size {2 (B), 4 (A) port }						
08	Rc1/4	●	●	●	●	
10	Rc3/8	●		●		
08G	G1/4	●	●	●	●	
10G	G3/8	●		●		
08N	NPT1/4	●	●	●	●	
10N	NPT3/8	●		●		
C8	ø8 push-in	●		●		
C10	ø10 push-in	●		●		
C12	ø12 push-in	●		●		
Ⓓ Electric connection (light and surge suppressor provided as standard)						
R1	I/O connector (500 mm)	●	●	●	●	
Ⓔ Option						
M	Non-locking (standard) Note 1	●	●	●	●	●
M7	Lock with pilot air OFF Note 1, Note 2	●	●	●	●	●
Z1	Air supply spacer Note 3	●	●			
Z3	Exhaust spacer Note 3	●	●			
K	External pilot	●	●	Note 4	Note 4	Note 4
A	Coolant proof	●	●	●	●	●
F	A/B port filter Note 5	●	●	●	●	
Ⓕ Station number						
1 to 16	1 station to 16 stations	●	●			
Ⓖ Voltage						
3	24 VDC	●	●	●	●	●
4	12 VDC	●	●	●	●	●

is not available.

⚠ Note on selection guide

Fill out "manifold specifications".

Note 1: Select either "M" or "M7".
Note 2: Both lock equipment with non-locking manual override and pilot air OFF function are provided.
Note 3: Instruct spacer installation position and quantity with the manifold specifications.
Refer to page 559 for the details.
Note 4: This is common for internal and external pilot.
Note 5: A filter to prevent entry of foreign matter is incorporated in end block 1 (P) port as standard.

Manifold components explanation and parts list

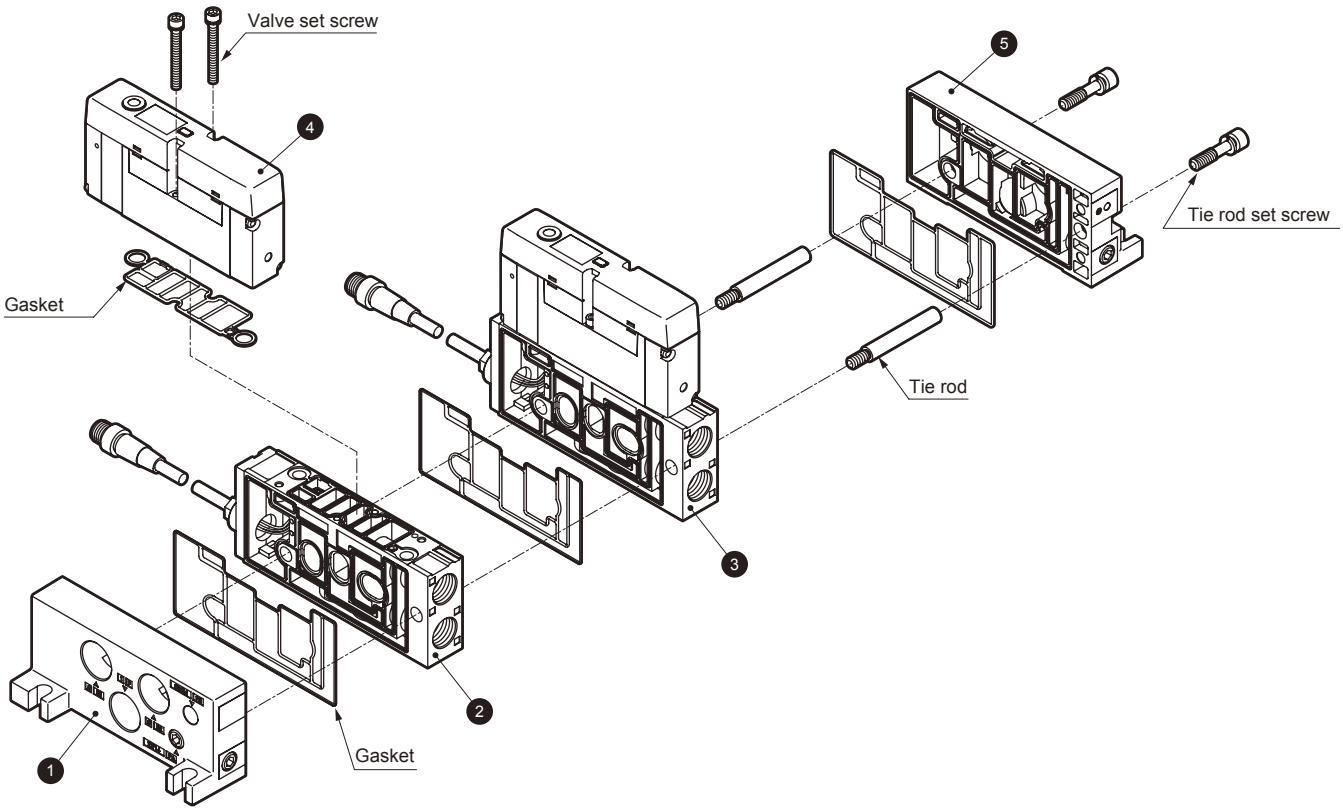

Main parts list (refer to pages 552 to 559 for details.)

No.	Component name	Model no. (example)	No.	Component name	Model no. (example)
1	End block L	NW4G4-EL	4	Discrete solenoid valve	W4GB419-00-M-3
2	Discrete valve block	NW4GB4-V-10-R1	5	End block R	NW4G4-ER
3	Discrete valve block with solenoid valve	NW4GB410-10-R1M-3			

Component weight (DC specifications)

(g)

Component		Weight	Component		Weight
End block	NW4G4-EL	316	Discrete valve block with masking plate	NW4GB4-MP-10-R1	415
	NW4G4-ER	308		NW4GZ4-MP-08-R1	448
Discrete valve block with solenoid valve	NW4GB410-10-R1M-3	584	Tie rod	W4G4-TR-V1 (2 pcs. set)	16
	NW4GB420-10-R1M-3	629		W4G4-TR-V2 (2 pcs. set)	36
	NW4GB430-10-R1M-3	661	Tie rod set screw (2 pcs.)		16
	NW4GZ410-08-R1M-3	617			
	NW4GZ420-08-R1M-3	662			
	NW4GZ430-08-R1M-3	694			

Repair parts and related parts list

No.	Parts name		Model no.
-	Cartridge type push-in joint and related parts	ø8 straight	4G4-JOINT-C8
		ø10 straight	4G4-JOINT-C10
		ø12 straight	4G4-JOINT-C12
		Blanking plug	For ø8: GWP8-B, for ø10: GWP10-B, for ø12: GWP12-B

Dimensions

MW4GB4 Side porting

● I/O connector (R1) Cable: VA-4DBXO5KUG3-CKD276-PG7 (CORRENS)

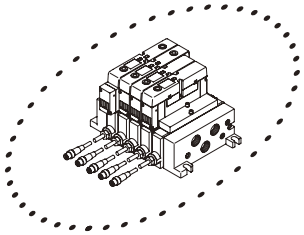

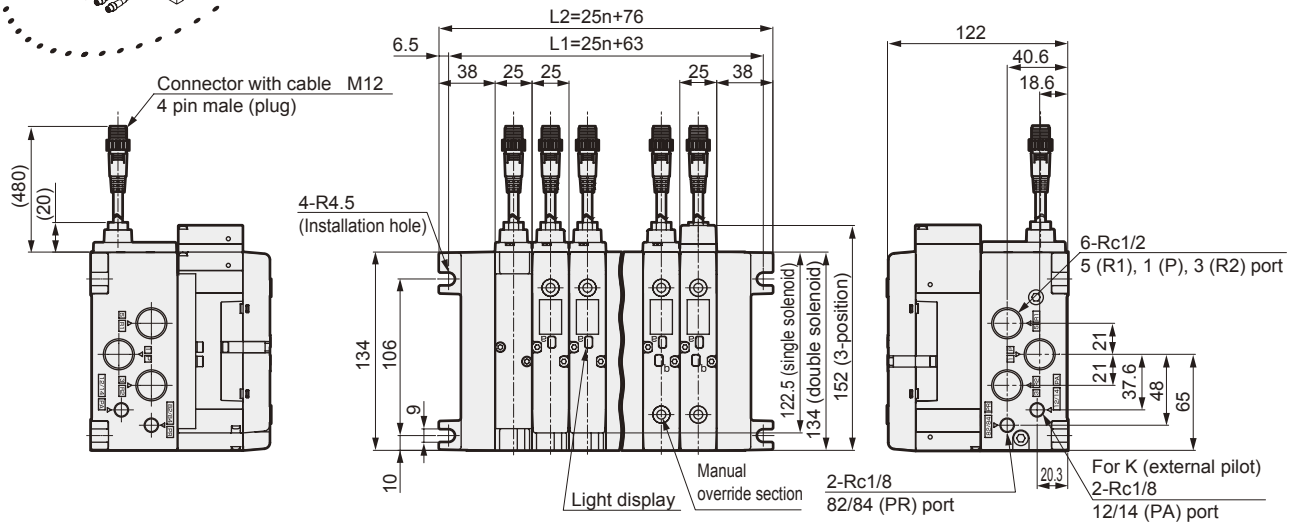

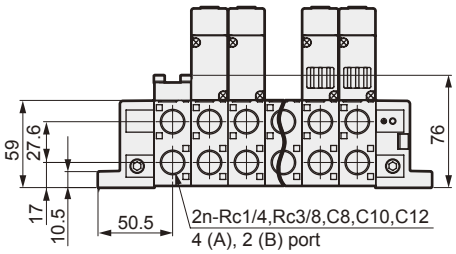

● Push-in joint for valve block

● ø8 (C8)

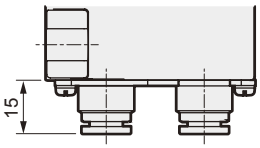

● ø10 (C10)

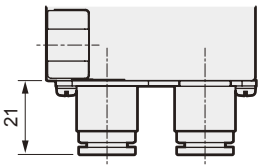

● ø12 (C12)

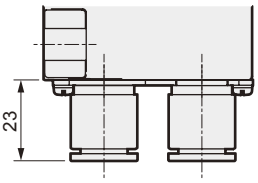

MW4GZ4 Back porting

● I/O connector (R1)

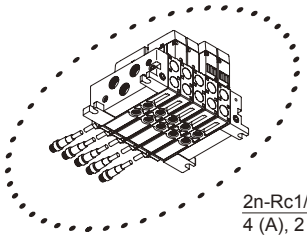

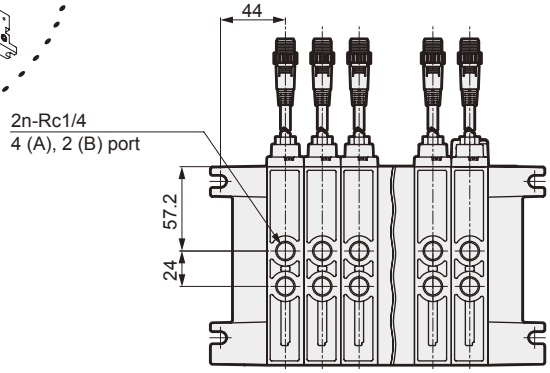

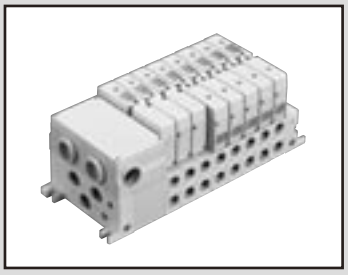

Reduced wiring manifold
sub-base side porting and back porting

MW4G$^{B}_{Z}$4-T1/6 Series

● Applicable cylinder bore size: ø63 to ø125

CE (Subject: DC voltage) Refer to Intro 17 for details. RoHS

Common specifications

Descriptions	MW4GB4	MW4GZ4
Manifold type	Block manifold	
Air supply and exhaust method	Common supply and common exhaust	
Pilot exhaust method	Main valve and pilot valve individual exhaust	
Piping direction	Sub-base side porting	Sub-base bottom porting
Type of valve / operation method	Pilot operated soft spool valve	
Working fluid	Compressed air	
Max. working pressure MPa	1.0	
Min. working pressure MPa	0.2	
Withstanding pressure MPa	1.5	
Ambient temperature °C	-5 to 55 (no freezing)	
Fluid temperature °C	5 to 55	
Manual override	Non-locking	
Lubrication Note 1	Not required	
Protective structure Note 2	Dust proof / jet-proof (IP65 or equivalent)	
Vibration / impact m/s^2	49 or less / 294 or less	
Working environment	Containing corrosive gas is impermissible.	

Note 1: Use the turbine oil Class 1 ISO VG32 if lubricated.Excessive lubrication results in instable operation.
Note 2: IP65 (IEC60529 (IEC529: 1989-11)) standards are applied to the test. Refer to page 529 for details.
Note 3: The working pressure range□

Electric specifications

Descriptions		MW4GB4/MW4GZ4
Rated voltage V	DC	12, 24
	AC	100 (50/60Hz)
Note 4		110 (50/60Hz)
Rated voltage fluctuation range		±10%
Holding current A	12 VDC	0.100
	24 VDC	0.050
	100 VAC	0.024
	110 VAC	0.024
Power consumption W	12 VDC	1.2
Note 5	24 VDC	1.2
Apparent power VA	100 VAC	2.4
	110 VAC	2.6
Heat proof class		B (molded coil)

Note 4: Serial transmission connection is used only with 24 VDC .
Note 5: Surge suppressor and indicator are provided as standard.

JIS symbol

● 5 port valve

2-position single solenoid

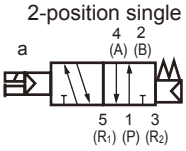

2-position double solenoid

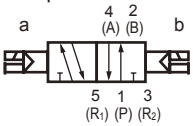

3-position all ports closed

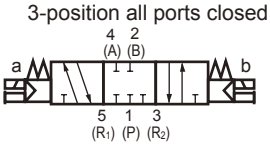

3-position A/B/R connection

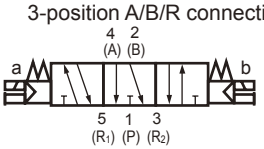

3-position P/A/B connection

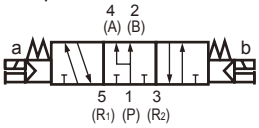

Individual specifications

Descriptions		MW4GB4		MW4GZ4	
		T10 (R) Common gland	T6*1 (R) Serial transmission	T10 (R) Common gland	T6*1 (R) Serial transmission
Maximum station number	Standard wiring	16			
	Double wiring	8			
Maximum solenoid number		16			
Port size	P port	Rc1/2, G1/2, NPT1/2			
	A/B port	Rc1/4, Rc3/8, G1/4, G3/8, NPT1/4, NPT3/8, Push-in joint ø8, ø10, ø12		Rc1/4, G1/4, NPT1/4	
	R port	Rc1/2, G1/2, NPT1/2			
	PA/PR port	Rc1/8, G1/8, NPT1/8			

Descriptions			MW4GB4/MW4GZ4	
			When ON	When OFF
Response time ms	2-position	Single solenoid	30	38
		Double solenoid	30	-
	3-position	A/B/R connection	50	58

Response time is the value at supply pressure 0.5 MPa, 20°C and oilless. The value will change based on quality of pressure and oil.

Flow characteristics

Model no.	Solenoid position		P → A/B		A/B → R	
			C (dm^3/ (s·bar))	b	C (dm^3/ (s·bar))	b
W4GB4	2-position		7.4	0.24	7.9	0.30
	3-position	All ports closed	6.4	0.22	7.1	0.32
		A/B/R connection	6.4	0.17	8.3	0.28
		P/A/B connection	7.1	0.16	7.4	0.28

Note 1: Effective sectional area S and sonic conductance C are converted as S ≒ 5.0 x C.
Note 2: Flow characteristics are values for port size Rc3/8.

Serial transmission slave unit specifications (refer to page 569 for the applicable PLC table.)

Descriptions		T6D1 (R) Note 1	T6G1 (R)	T6A1 (R)	T6J1 (R)	T6C1 (R)
Network name		DeviceNet	CC-Link ver1.10	UNIWIRE SYSTEM	UNIWIRE H SYSTEM	CompoBus/S
Power voltage	Unit side	24 VDC ±10%		24 VDC		24 VDC ±10%
	Valve side	24 VDC +10%, -5%		+10%, -5% (power supply terminal common)		24 VDC +10%, -5%
Current consumption	Unit side	100 mA or less (Output when all points ON)		200 mA or less Output when all points ON (Current consumption of body not included)	150 mA or less Output when all points ON (Current consumption of body not included)	60 mA or less (Output when all points ON)
	Valve side	15 mA or less (when all points OFF)				15 mA or less (when all points OFF)
Output no.		16 points	16 points	16 points	16 points	16 points

Note 1: Consult with CKD for EDS file. (EDS file: Text file of parameters for communicating with each company's master.)

Coolant proof specifications

Can be selected with "G", "F" option "A" in How to Order on pages 544 and 545.

MW4G$^{B}_{Z}$4-T1 Series

Reduced wiring manifold: Sub-base side porting and back porting

How to order

● Manifold model no.

MW4GB4 8 0 - 10 — T10 W M - 6 - 3

MW4GZ4 8 0 - 08 — T10R W M - 6 - 3

● Discrete valve block with solenoid valve

NW4GB4 1 0 - 10 - 1 M7 — 1

NW4GZ4 1 0 - 08N - 1 M7 — 4

● Discrete solenoid valve

W4GB4 1 9 - 00 — M — 3

Ⓐ Model no. Ⓑ Solenoid position

Ⓒ Port size

Ⓓ Electric connection

Ⓔ Wiring method

Ⓕ Terminal and connector pin array

Ⓖ Option

Ⓗ Station number

Ⓘ Voltage

Symbol	Descriptions	Ⓐ Model no. Manifold MW4GB4	Manifold MW4GZ4	Discrete valve block with solenoid valve NW4GB4	NW4GZ4	Discrete solenoid valve W4GB4
Ⓑ Solenoid position						
1	2-position single solenoid	●	●	●	●	●
2	2-position double solenoid	●	●	●	●	●
3	3-position all ports closed	●	●	●	●	●
4	3-position A/B/R connection	●	●	●	●	●
5	3-position P/A/B connection	●	●	●	●	●
8	Mix manifold	●	●			
Ⓒ Port size {2 (B), 4 (A) port }						
08	Rc1/4	●	●	●	●	
10	Rc3/8	●		●		
08G	G1/4	●	●	●	●	
10G	G3/8	●		●		
08N	NPT1/4	●	●	●	●	
10N	NPT3/8	●		●		
C8	ø8 push-in	●		●		
C10	ø10 push-in	●		●		
C12	ø12 push-in	●		●		
Ⓓ Electric connection						
Blank	Reduced wiring DC specifications			●	●	
1	Common gland AC spec. 1 to 6th sta.			●	●	
2	Common gland AC spec. 7 to 12th sta.			●	●	
3	Common gland AC spec. 13 to 16th sta.			●	●	
Ⓔ Wiring method (light and surge suppressor provided as standard)						
Blank	Discrete Note 1			●	●	●
T10	Common gland Left	●	●			
T10R	Common gland Right	●	●			
Ⓕ Terminal and connector pin array						
Blank	Standard wiring Note 2	●	●	●	●	●
W	Double wiring Note 2	●	●	●	●	
Ⓖ Option						
M	Non-locking (standard) Note 3	●	●	●	●	●
M7	Lock with pilot air OFF Note 3, Note 4	●	●	●	●	●
Z1	Air supply spacer Note 5	●	●			
Z3	Exhaust spacer Note 5	●	●			
K	External pilot	●	●	Note 6	Note 6	Note 6
A	Coolant proof	●	●	●	●	●
F	A/B port filter Note 7	●	●	●	●	
Ⓗ Station number						
1 to 16	1 station to 16 stations	● Note 8	● Note 8			
Ⓘ Voltage						
1	100 VAC	●	●	●	●	●
3	24 VDC	●	●	●	●	●
4	12 VDC	●	●	●	●	●
5	110 VAC	●	●	●	●	●

is not available.

⚠ Note on selection guide

Fill out "manifold specifications".

Note 1: W4GB4*9: Plug-in connector
NW4G*4*0: Electric wire for relay (AC)
Connector for relay (DC)

Note 2: Standard wiring ··· Wired based on the installed valve.
Double wiring ··· Double-solenoid wiring used regardless of installed valve.

Note 3: Select either "M" or "M7".

Note 4: Both lock devices with non-locking manual override and pilot air OFF function are provided.

Note 5: Instruct spacer installation position and quantity with the manifold specifications.
Refer to page 559 for the details.

Note 6: This is common for internal and external pilot.

Note 7: A filter to prevent entry of foreign matter is incorporated in end block 1 (P) port as standard.

Note 8: The maximum number of MF stations is 16 with standard wiring and 8 with double wiring.

How to order

● Manifold model no.

MW4GB4 8 0 - 10 - T6G1 W M - 6 - 3

MW4GZ4 8 0 - 08 - T6D1R W M - 6 - 3

● Discrete valve block with solenoid valve

NW4GB4 1 0 - 10 —— M7 —— 3

NW4GZ4 1 0 - 08N —— M7 —— 3

● Discrete solenoid valve

W4GB4 1 9 - 00 —— M —— 3

Ⓐ Model no. Ⓑ Solenoid position Ⓒ Port size Ⓓ Wiring method Ⓔ Terminal and connector pin array Ⓕ Option Ⓖ Station number Ⓗ Voltage

Symbol	Descriptions		Ⓐ Model no. Manifold MW4GB4	MW4GZ4	Discrete valve block with solenoid valve NW4GB4	NW4GZ4	Discrete solenoid valve W4GB4
Ⓑ Solenoid position							
1	2-position single solenoid		●	●	●	●	●
2	2-position double solenoid		●	●	●	●	●
3	3-position all ports closed		●	●	●	●	●
4	3-position A/B/R connection		●	●	●	●	●
5	3-position P/A/B connection		●	●	●	●	●
8	Mix manifold		●	●			
Ⓒ Port size {2 (B), 4 (A) port }							
08	Rc1/4		●	●	●	●	
10	Rc3/8		●		●		
08G	G1/4		●	●	●	●	
10G	G3/8		●		●		
08N	NPT1/4		●	●	●	●	
10N	NPT3/8		●		●		
C8	ø8 push-in		●		●		
C10	ø10 push-in		●		●		
C12	ø12 push-in		●		●		
Ⓓ Wiring method (light and surge suppressor provided as standard)							
Blank	Discrete	Note 1			●	●	●
T6G1	Serial transmission	Left	●	●			
T6G1R	CC-Link 16 points	Right	●	●			
T6J1	Serial transmission	Left	●	●			
T6J1R	UNIWIRE H 16 points	Right	●	●			
T6A1	Serial transmission	Left	●	●			
T6A1R	UNIWIRE 16 points	Right	●	●			
T6D1	Serial transmission	Left	●	●			
T6D1R	DeviceNet 16 points	Right	●	●			
T6C1	Serial transmission	Left	●	●			
T6C1R	CompoBus/S 16 points	Right	●	●			
Ⓔ Terminal and connector pin array							
Blank	Standard wiring	Note 2	●	●	●	●	●
W	Double wiring	Note 2	●	●	●	●	
Ⓕ Option							
M	Non-locking (standard)	Note 3	●	●	●	●	●
M7	Lock with pilot air OFF	Note 3, Note 4	●	●	●	●	●
Z1	Air supply spacer	Note 5	●	●			
Z3	Exhaust spacer	Note 5	●	●			
K	External pilot		●	●	Note 6	Note 6	Note 6
A	Coolant proof	Note 7	●	●	●	●	●
F	A/B port filter	Note 8	●	●	●	●	
Ⓖ Station number							
1 to 16	1 station to 16 stations		● Note 9	● Note 9			
Ⓗ Voltage							
3	24 VDC	Note 10	●	●	●	●	●

is not available.

⚠ Note on selection guide

Fill out "manifold specifications".

Note 1: W4GB4*9: Plug-in connector
NW4G*4*0: Electric wire for relay (AC)
Connector for relay (DC)

Note 2: Standard wiring ··· Wired based on the installed valve.
Double wiring ··· Double-solenoid wiring used regardless of installed valve.

Note 3: Select either "M" or "M7".

Note 4: Both lock devices with non-locking manual override and pilot air OFF function are provided.

Note 5: Instruct spacer installation position and quantity with the manifold specifications.
Refer to page 559 for the details.

Note 6: This is common for internal and external pilot.

Note 7: For slave unit (OPP2), standard specifications are different from coolant proof specifications.

Option	Slave unit cover material	Specifications
Standard	Polycarbonate	Spatter proof
A	Nylon	Coolant proof

Note 8: A filter to prevent entry of foreign matter is incorporated in end block 1 (P) port as standard.

Note 9: The maximum number of MF stations is 16 with standard wiring and 8 with double wiring.

Note 10: 100/110 VAC and 12 VDC settings are not used for serial transmission connection specifications.

MN3E0 MN4E0
4GA/B
M4GA/B
MN4GA/B
4GA/B (Master)
W4GA/B2
W4GB4
MN3S0 MN4S0
4TB
4L2-4/ LMF0
4SA/B0
4SA/B1
4KA/B
4F
PV5G/ CMF
PV5/ CMF
3MA/B0
3PA/B
P/M/B
NP/NAP/ NVP
4F*0E
HMV HSV
2QV 3QV
SKH
PCD/ FS/FD
Ending

Manifold components explanation and parts list

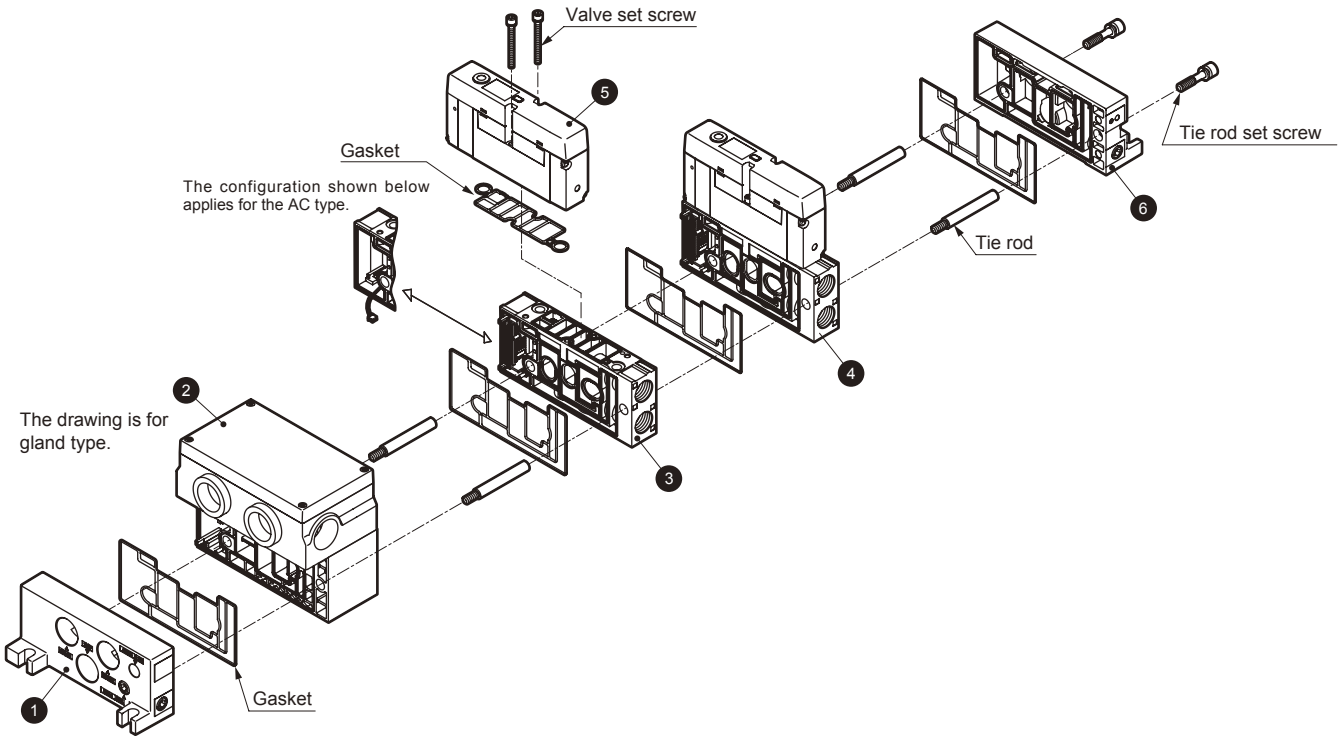

Main parts list (refer to pages 552 to 559 for details.)

No.	Component name	Model no. (example)	No.	Component name	Model no. (example)
1	End block L	NW4G4-EL	4	Discrete valve block with solenoid valve	NW4GB410-10-M-3
2	Wiring block	NW4G4-T10	5	Discrete solenoid valve	W4GB419-00-M-3
3	Discrete valve block	NW4GB4-V1-10	6	End block R	NW4G4-ER

Component weight (DC specifications)

(g)

Block type		Weight	Block type		Weight
End block	NW4G4-EL	316	Discrete valve block with masking plate	NW4GB4-MPD-10	360
	NW4G4-ER	308		NW4GZ4-MPD-08	393
Discrete valve block with solenoid valve	NW4GB410-10-M-3	527	Wiring block	NW4G4-T10	550
	NW4GB420-10-M-3	573		NW4G4-T6G1	710
	NW4GB430-10-M-3	605	Tie rod	W4G4-TR-V1 (2 pcs. set)	16
	NW4GZ410-08-M-3	560		W4G4-TR-V2 (2 pcs. set)	36
	NW4GZ420-08-M-3	606	Tie rod set screw (2 pcs.)		16
	NW4GZ430-08-M-3	638			

Repair parts and related parts list

No.	Parts name		Model no.
-	Cartridge type push-in joint and related parts	ø8 straight	4G4-JOINT-C8
		ø10 straight	4G4-JOINT-C10
		ø12 straight	4G4-JOINT-C12
		Blanking plug	For ø8: GWP8-B, for ø10: GWP10-B, for ø12: GWP12-B

Kit for wiring block T10

● Cable clamp

Model no.	Applicable cable O.D.	Descriptions
W4G-SCL-18A	ø14.5 to 16.5	This is used to protect a cable from dust and jet.
W4G-SCL-18B	ø16.5 to 18.5	

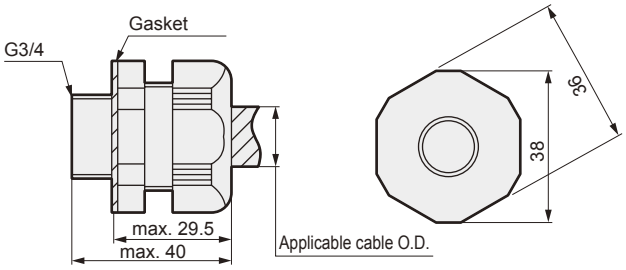

(Reference value)
Body tightening torque : 4.0 to 4.5 N•m
Cable clamp tightening torque : 3.0 to 3.5 N•m

Kit for wiring block T6*

● Cable clamp

Model no.	Applicable cable O.D.	Descriptions
W4G-OA-W1608C1	ø6 to 8	This is used to protect a cable from dust and jet.

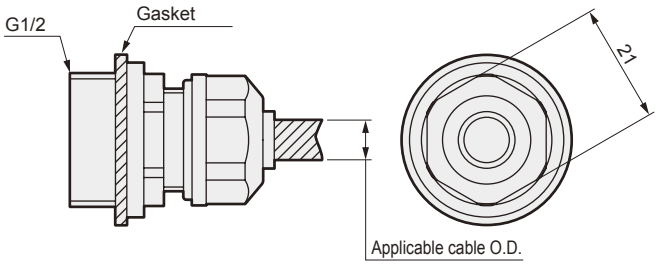

Applicable cable outer diameter : ø6 to ø8
(Reference value)
Body tightening torque : 2.0 to 2.4 N•m
Cable clamp tightening torque : 0.5 to 0.7 N•m

MN3E0
MN4E0
4GA/B
M4GA/B
MN4GA/B
4GA/B (Master)
W4GA/B2
W4GB4
MN3S0
MN4S0
4TB
4L2-4/ LMF0
4SA/B0
4SA/B1
4KA/B
4F
PV5G/ CMF
PV5/ CMF
3MA/B0
3PA/B
P/M/B
NP/NAP/ NVP
4F*0E
HMV HSV
2QV 3QV
SKH
PCD/ FS/FD
Ending

Dimensions

MW4GB4 Side porting

● Common gland (T10) Left

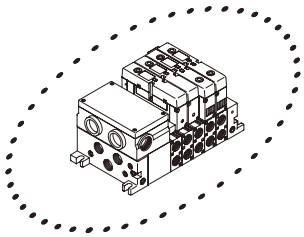

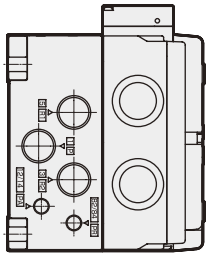

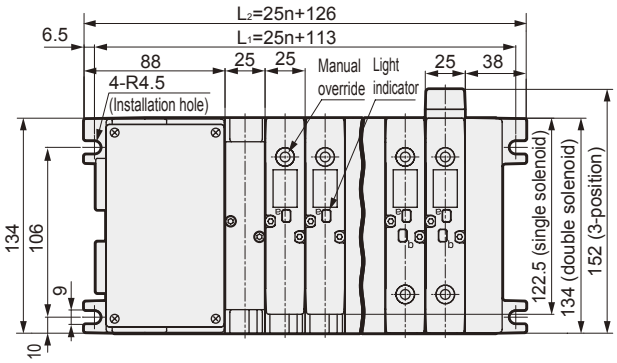

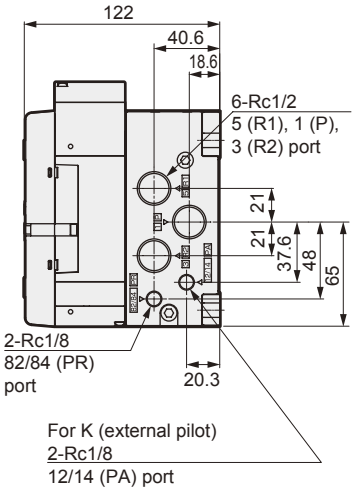

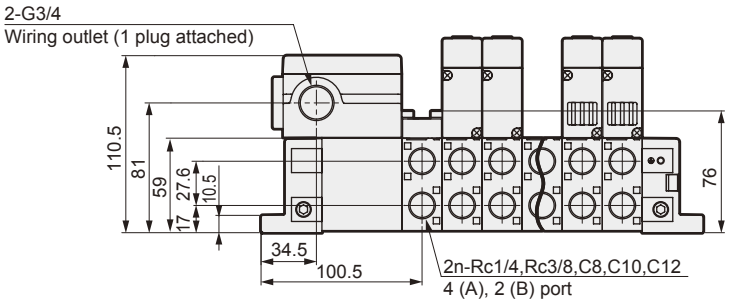

● Push-in joint for valve block

● ø8 (C8)

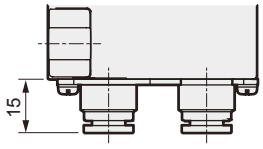

● ø10 (C10)

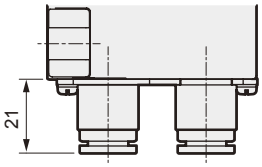

● ø12 (C12)

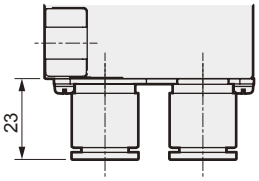

MW4GZ4 Back porting

● Common gland (T10) Left

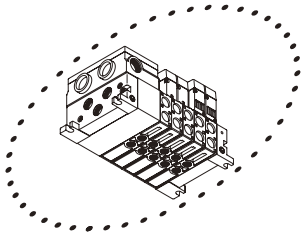

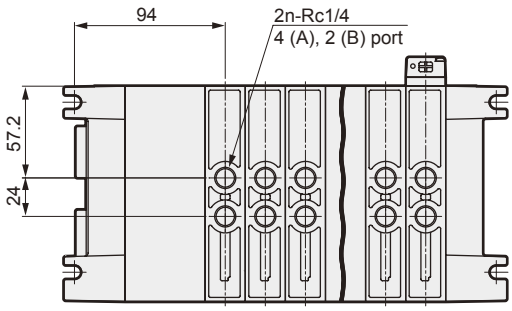

Dimensions

MW4GB4 Side porting

● Common gland (T10R) Right

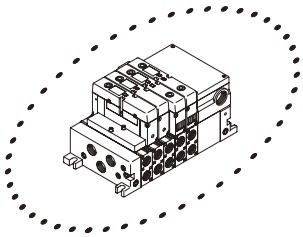

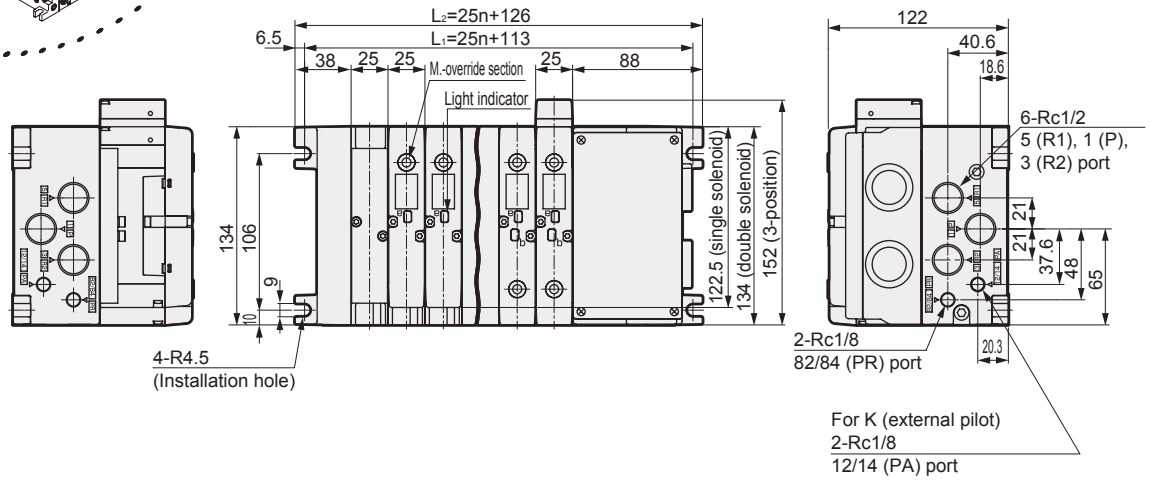

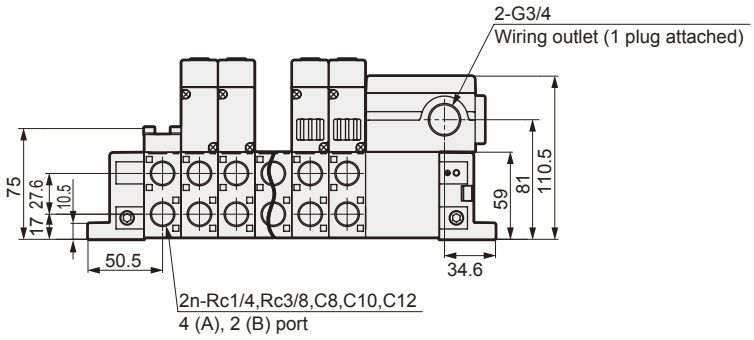

● Push-in joint for valve block

● ø8 (C8)

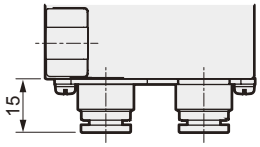

● ø10 (C10)

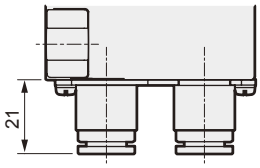

● ø12 (C12)

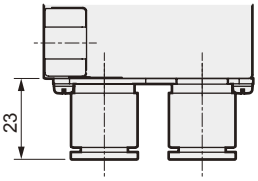

MW4GZ4 Back porting

● Common gland (T10R) Right

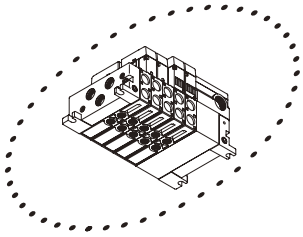

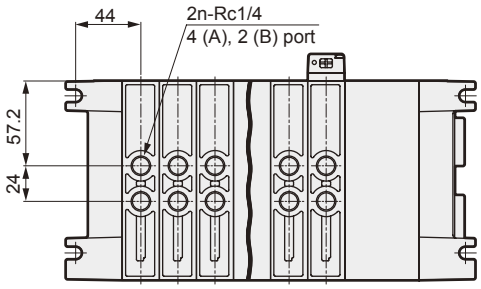

MN3E0 MN4E0
4GA/B
M4GA/B
MN4GA/B
4GA/B (Master)
W4GA/B2
W4GB4
MN3S0 MN4S0
4TB
4L2-4/ LMF0
4SA/B0
4SA/B1
4KA/B
4F
PV5G/ CMF
PV5/ CMF
3MA/B0
3PA/B
P/M/B
NP/NAP/ NVP
4F*0E
HMV HSV
2QV 3QV
SKH
PCD/ FS/FD
Ending

Dimensions

MW4GB4 Side porting

● Serial transmission (T6*1) Left

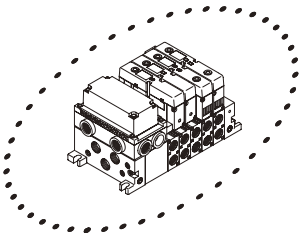

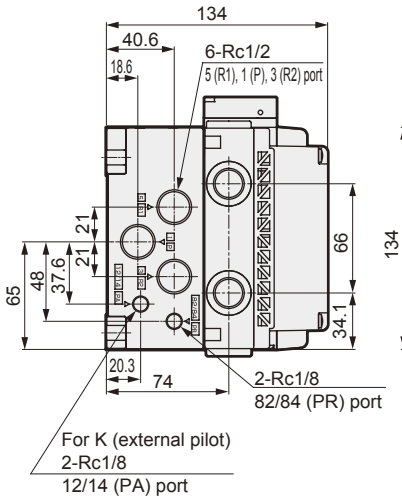

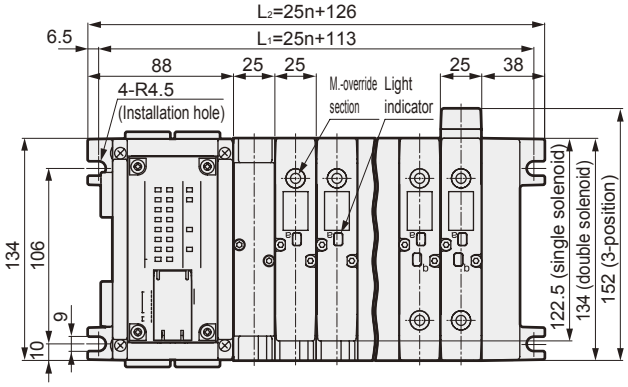

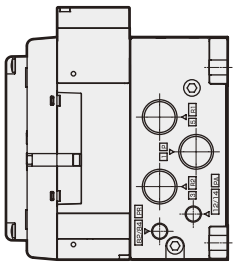

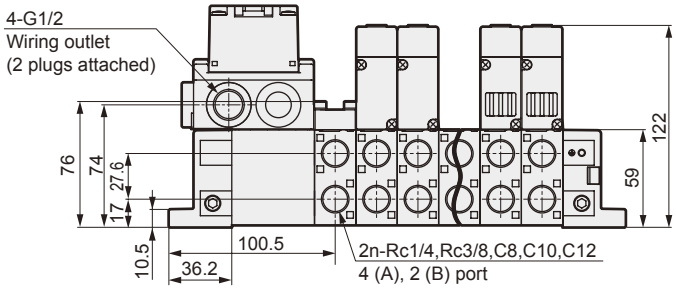

● Push-in joint for valve block

● ø8 (C8)

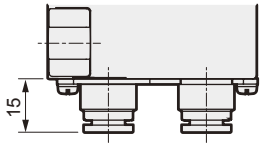

● ø10 (C10)

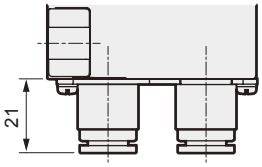

● ø12 (C12)

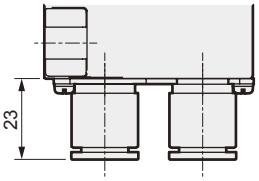

MW4GZ4 Back porting

● Serial transmission (T6*1) Left

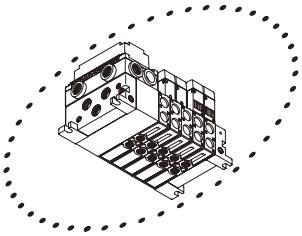

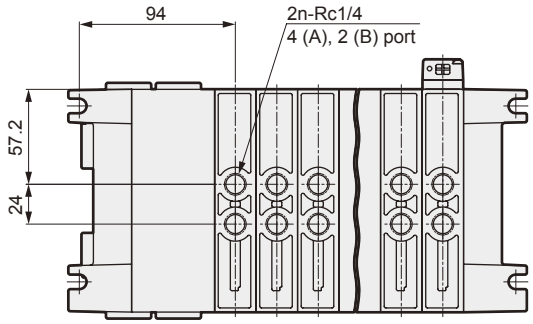

Dimensions

MW4GB4 Side porting

● Serial transmission (T6*1R) Right

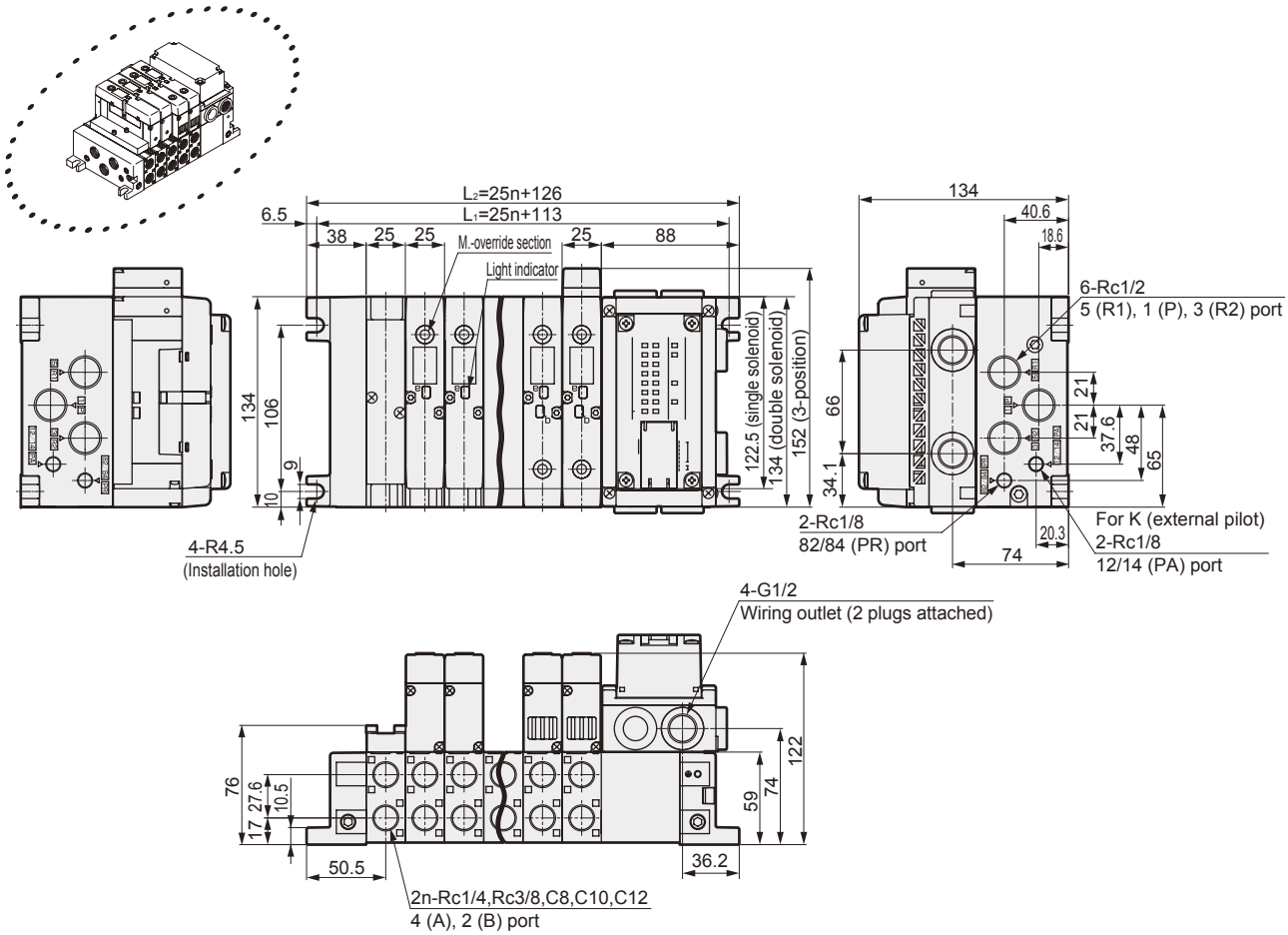

● Push-in joint for valve block

● ø8 (C8)

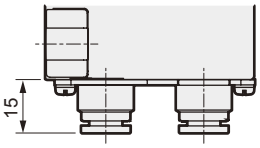

● ø10 (C10)

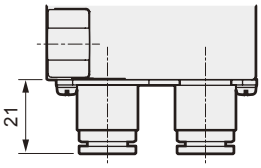

● ø12 (C12)

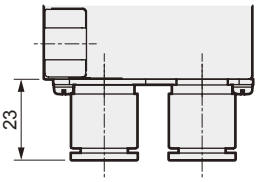

MW4GZ4 Back porting

● Serial transmission (T6*1R) Right

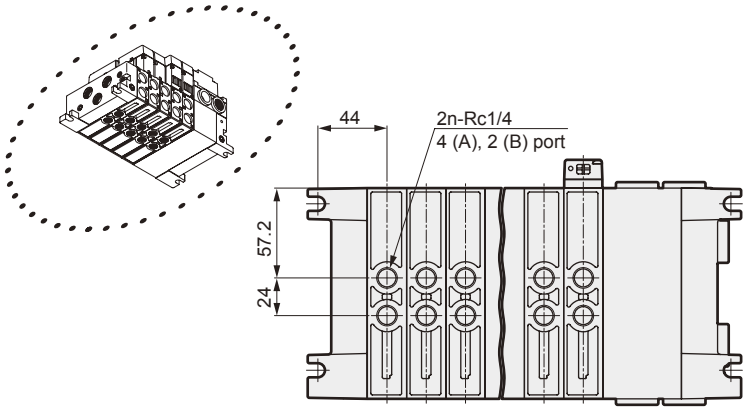

MN3E0
MN4E0
4GA/B
M4GA/B
MN4GA/B
4GA/B (Master)
W4GA/B2
W4GB4
MN3S0
MN4S0
4TB
4L2-4/ LMF0
4SA/B0
4SA/B1
4KA/B
4F
PV5G/ CMF
PV5/ CMF
3MA/B0
3PA/B
P/M/B
NP/NAP/ NVP
4F*0E
HMV
HSV
2QV
3QV
SKH
PCD/ FS/FD
Ending

Block manifold: Block configurations

Simple, unrestricted assembly makes it easy to increase stations and conduct maintenance.

● Valve block with solenoid valve

① Arrange required solenoid valves for required stations.
Note that the maximum number of stations is determined by wiring. (Refer to pages 538, 542.)
② Solenoid valve numbers are counted as stations 1st, 2nd, or 3rd etc. from left side.

● End block

① End blocks are installed on both ends of the manifold.

● Manifold base

① Orders for only the manifold base are also accepted, but the specifications may be limited.
(The manifold specifications are not needed when only the manifold base is ordered.)

Block manifold configuration — Piping section — Piping block

Ⓐ Discrete valve block with solenoid valve

● Sub-base side porting ● Sub-base back porting

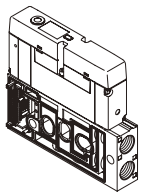

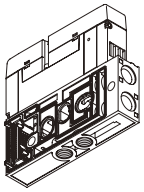

Ⓑ Discrete valve block with masking plate

● Sub-base side porting ● Sub-base back porting

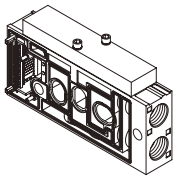

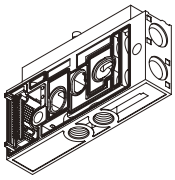

Ⓒ Discrete valve block

● Sub-base side porting ● Sub-base back porting

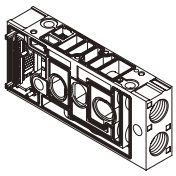

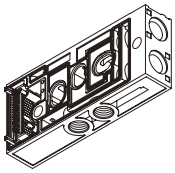

Block manifold configuration

- Piping section — Piping block
- Wiring section — Wiring block
- Related products — Related products

Piping block

Ⓓ End block

● Left

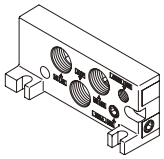

● Right

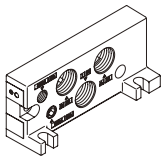

● Left (with silencer box)

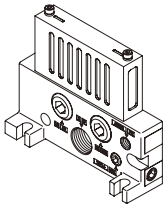

● Right (with silencer box)

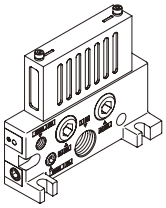

Ⓔ Manifold base

● Sub-base side porting

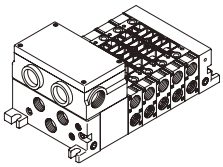

● Sub-base back porting

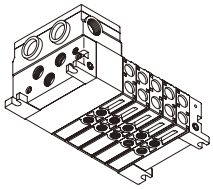

Wiring block

Ⓕ Common gland block

● Left

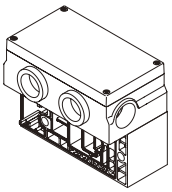

● Right

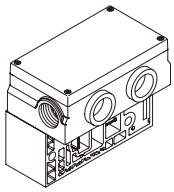

Ⓖ Serial transmission block

● Left

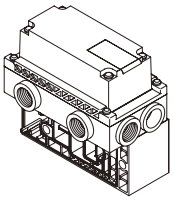

● Right

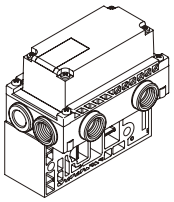

Related products

Ⓗ Related products

● Cable clamp

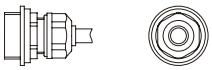

● Masking plate kit

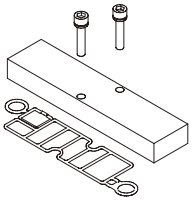

● Tie rod

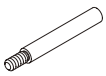

● Blanking plug

● Partition plug

● Fuse

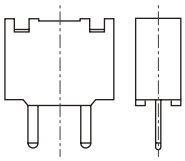

● Individual supply spacer

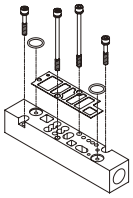

● Individual exhaust spacer

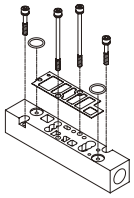

MN3E0 MN4E0
4GA/B
M4GA/B
MN4GA/B
4GA/B (Master)
W4GA/B2
W4GB4
MN3S0 MN4S0
4TB
4L2-4/ LMF0
4SA/B0
4SA/B1
4KA/B
4F
PV5G/ CMF
PV5/ CMF
3MA/B0
3PA/B
P/M/B
NP/NAP/ NVP
4F*0E
HMV HSV
2QV 3QV
SKH
PCD/ FS/FD
Ending

Piping section

A. Discrete valve block with solenoid valve

* The tie rod (2 pcs.) is included.

This block is assembled with solenoid valve and valve block (separated resin base).
Refer to pages 539, 544, 545 for selection guide.

B. Discrete valve block with masking plate

* The tie rod (2 pcs.) is included.

NW4GB4 - MP - 10 - R1 F
NW4GZ4 - MPD - 08 - 1 F

Ⓐ Model no. Ⓑ Type Ⓒ Port size Ⓓ Electric connection Ⓔ Option

Ⓐ Model no.		Ⓑ Type		Ⓒ Port size {2 (B), 4 (A) port }			Ⓓ Electric connection		Ⓔ Option	
NW4GB4	Sub-base side porting	MP	Individual wiring	08	Rc1/4		Blank	Reduced wiring DC specifications	Blank	No option
NW4GZ4	Sub-base back porting	MPS	Reduced wiring single standard wiring	10	Rc3/8	Note 1	R1	I/O connector (500 mm for DC)	F	A/B port filter
		MPD	Reduced wiring single/double wiring, reduced wiring double, 3-position	08G	G1/4		1	Common gland AC spec. 1 to 6th sta.		
				10G	G3/8	Note 1	2	Common gland AC spec. 7 to 12th sta.		
				08N	NPT1/4		3	Common gland AC spec. 13 to 16th sta.		
				10N	NPT3/8	Note 1				
				C8	ø8 push-in	Note 1				
				C10	ø10 push-in	Note 1				
				C12	ø12 push-in	Note 1				

Note 1: Sub-base back porting is not available.

<For DC>

NW4GB

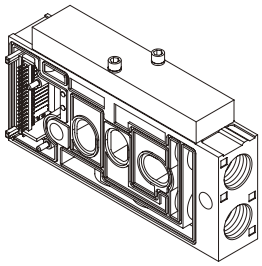

NW4GZ

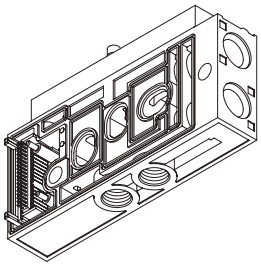

<For AC>

NW4GB

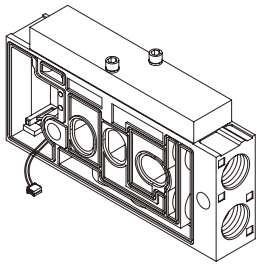

NW4GZ

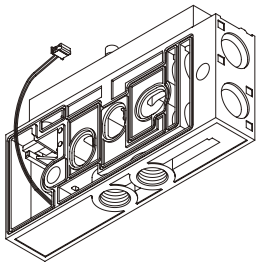

Piping section

C. Discrete valve block (discrete only) * The tie rod (2 pcs.) is included.

NW4GB4 - V1 - 10 - ◯◯
NW4GZ4 - V2 - 08 - 1 F

Ⓐ Model no. Ⓑ Type Ⓒ Port size Ⓓ Electric connection Ⓔ Option

Ⓐ Model no.		Ⓑ Type		Ⓒ Port size {2 (B), 4 (A) port}		Ⓓ Electric connection		Ⓔ Option	
NW4GB4	Sub-base side porting	V	Individual wiring	08	Rc1/4	Blank	Reduced wiring DC specifications	Blank	No option
NW4GZ4	Sub-base back porting	V1	Reduced wiring single standard wiring	10	Rc3/8 (only NW4GB4)	R1	I/O connector (500 mm for DC)	F	A/B port filter
		V2	Reduced wiring single/double wiring, reduced wiring double, 3-position	08G	G1/4	1	Common gland AC spec. 1 to 6th sta.		
				10G	G3/8 (only NW4GB4)	2	Common gland AC spec. 7 to 12th sta.		
				08N	NPT1/4	3	Common gland AC spec. 13 to 16th sta.		
				10N	NPT3/8 (only NW4GB4)				
				C8	ø8 push-in (only NW4GB4)				
				C10	ø10 push-in (only NW4GB4)				
				C12	ø12 push-in (only NW4GB4)				

<For DC>
NW4GB

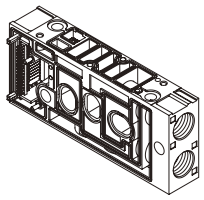

NW4GZ

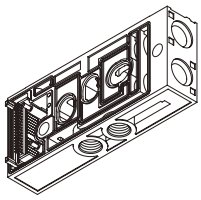

<For AC>
NW4GB

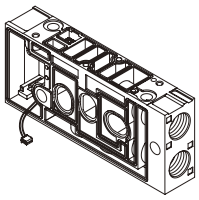

NW4GZ

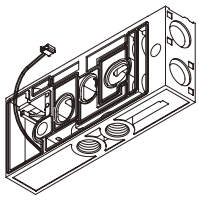

Piping section

Probl□

D. End block

The atmospheric release type has a built-in exhaust muffler.

NW4G4 - ER ◯ K

Model no. Ⓐ Type Ⓑ Port size Ⓒ Option

Ⓐ Type		Ⓑ Port size {1 (P), 3 (R2), 5 (R1) port}		Ⓒ Option	
EL	Common exhaust Left	Blank	Rc1/2	Blank	No option
ER	Common exhaust Right	G	G1/2	K	External pilot Note 1
EXL	Atmospheric release L with silencer box	N	NPT1/2		
EXR	Atmospheric release R with silencer box				

Note 1: "K" and "EXL" or "EXR" cannot be used together.

NW4G4-EL

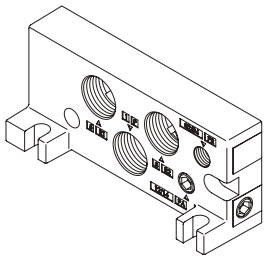

NW4G4-ER

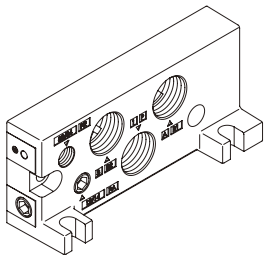

NW4G4-EXL

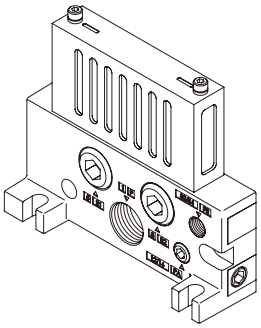

NW4G4-EXR

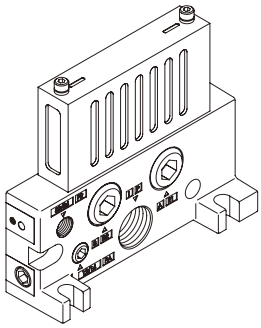

MN3E0 MN4E0
4GA/B
M4GA/B
MN4GA/B
4GA/B (Master)
W4GA/B2
W4GB4
MN3S0 MN4S0
4TB
4L2-4/ LMF0
4SA/B0
4SA/B1
4KA/B
4F
PV5G/ CMF
PV5/ CMF
3MA/B0
3PA/B
P/M/B
NP/NAP/ NVP
4F*0E
HMV HSV
2QV 3QV
SKH
PCD/ FS/FD
Ending

Piping section

E. Manifold base

Orders for only the manifold base are also accepted, but the specifications may be limited.
(The manifold specifications are not needed when only the manifold base is ordered.)

Sub-base side porting : **MW4GB4 - 10 - R1 F - 5 - 3**

Sub-base back porting : **MW4GZ4 - 08 XD - T10R W A - 6 - 3**

Ⓐ Model no. Ⓑ Port size Ⓒ Silencer box Ⓓ Wiring method Ⓔ Terminal and connector pin array Ⓕ Option Ⓖ Station number Ⓗ Voltage

Ⓐ Model no.		Ⓑ Port size {2 (B), 4 (A) port }			Ⓒ Silencer box		Ⓓ Wiring method		
NW4GB4	Sub-base side porting	08	Rc1/4		Blank	w/o silencer box	R1	Individual wiring I/O cable outlet	Note 4
NW4GZ4	Sub-base back porting	10	Rc3/8	Note 1	XU	Atmospheric release silencer box R Note 2, 3	T10	Common gland	Note 2
		08G	G1/4		XD	Atmospheric release silencer box L Note 2, 3	T10R	Common gland (right)	Note 2
		10G	G3/8	Note 1			T6G1	CC-Link 16 points	Note 2, 5
		08N	NPT1/4				T6G1R	CC-Link 16 points (right)	Note 2, 5
		10N	NPT3/8	Note 1			T6J1	UNIWIRE H 16 points	Note 2, 5
		C8	ø8 push-in	Note 1			T6J1R	UNIWIRE H 16 points (right)	Note 2, 5
		C10	ø10 push-in	Note 1			T6A1	UNIWIRE 16 points	Note 2, 5
		C12	ø12 push-in	Note 1			T6A1R	UNIWIRE 16 points (right)	Note 2, 5
							T6D1	DeviceNet 16 points	Note 2, 5
							T6D1R	DeviceNet 16 points (right)	Note 2, 5
							T6C1	CompoBus/S 16 points	Note 2, 5
							T6C1R	CompoBus/S 16 points (right)	Note 2, 5

Note 1: Sub-base back porting is not available.

Note 2: "XD" cannot be selected when the left wire connection is selected. "XU" can not be selected for right.
Note 3: "K" and "XU" or "XD" cannot be used together.

Note 4: Only DC voltage is used for R1.
Note 5: Only 24 VDC voltage is used for T6*.

Ⓔ Terminal and connector pin array			Ⓕ Option			Ⓖ Station number		Ⓗ Voltage	
W	Double wiring	Note 6	Blank	No option		1	1 station	1	100 VAC
			K	External pilot	Note 3	to	to	3	24 VDC
			A	Coolant proof	Note 7	8	8 stations	4	12 VDC
			F	A/B port filter	Note 8			5	110 VAC

Note 6: Double wiring specifications are used for the individual wiring (R1), so W does not need to be designated.

Note 7: For T6*, the slave station (OPP2) differs for standard specifications and coolant proof specifications.
Note 8: A filter to prevent entry of foreign matter is incorporated in end block 1 (P) port as standard.

MW4GB4 (sub-base side porting)

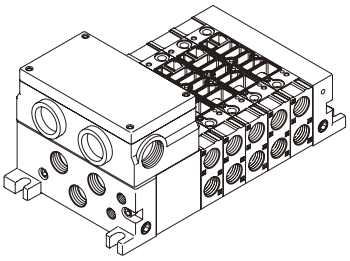

MW4GZ4 (sub-base back porting)

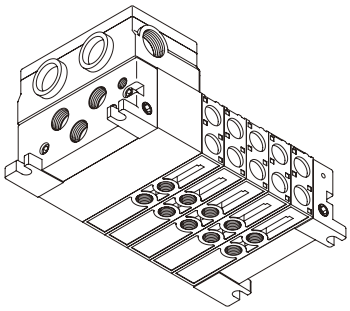

Wiring section (Wiring block)

* Discrete order of wiring block is only DC specifications.

F. Common gland block (T10)

* The tie rod (2 pcs.) is included.

● Left
NW4G4-T10

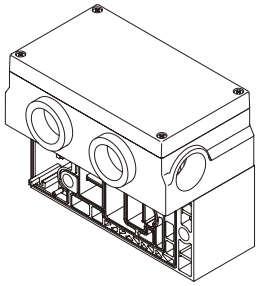

● Right
NW4G4-T10R

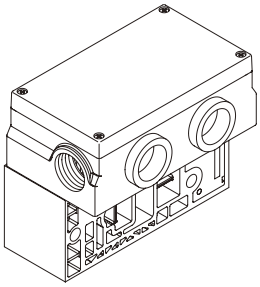

G. Serial transmission block

* The tie rod (2 pcs.) is included.

● Left
NW4G4-T6*1

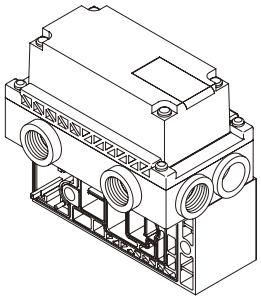

NW4G4 - T6G1 - A
Ⓐ Type Ⓑ Option

Ⓐ Type		Ⓑ Option	
T6G1	CC-Link 16 points	Blank	Standard (spatter proof)
T6J1	UNIWIRE H 16 points	A	Coolant proof Note 1
T6A1	UNIWIRE 16 points		
T6D1	DeviceNet 16 points		
T6C1	CompoBus/S 16 points		

● Right
NW4G4-T6*1R

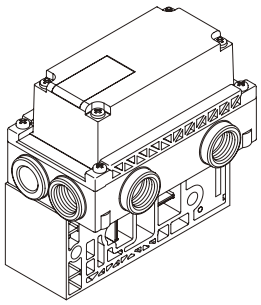

NW4G4 - T6G1R - A
Ⓐ Type Ⓑ Option

Ⓐ Type		Ⓑ Option	
T6G1R	CC-Link 16 points	Blank	Standard (spatter proof)
T6J1R	UNIWIRE H 16 points	A	Coolant proof Note 1
T6A1R	UNIWIRE 16 points		
T6D1R	DeviceNet 16 points		
T6C1R	CompoBus/S 16 points		

Discrete serial transmission slave unit model no.

W4G - OPP2 - 1G - A
Ⓐ Wiring method Ⓑ Option

Ⓐ Wiring method		Ⓑ Option	
1G	T6G1 CC-Link 16 points	Blank	Standard (spatter proof)
1J	T6J1 UNIWIRE H 16 points	A	Coolant proof Note 1
1A	T6A1 UNIWIRE 16 points		
1D	T6D1 DeviceNet 16 points		

⚠ Note when selecting model no.

For slave unit (OPP2), standard specifications are different from coolant proof specifications.

Option	Slave unit cover material	Specifications
Standard	Polycarbonate	Spatter proof
A	Nylon	Coolant proof

Coolant proof specifications

Can be selected with "B" option "A" in How to Order.

MN3E0 MN4E0
4GA/B
M4GA/B
MN4GA/B
4GA/B (Master)
W4GA/B2
W4GB4
MN3S0 MN4S0
4TB
4L2-4/ LMF0
4SA/B0
4SA/B1
4KA/B
4F
PV5G/ CMF
PV5/ CMF
3MA/B0
3PA/B
P/M/B
NP/NAP/ NVP
4F*0E
HMV HSV
2QV 3QV
SKH
PCD/ FS/FD
Ending

Related products

● Cable clamp

For T10

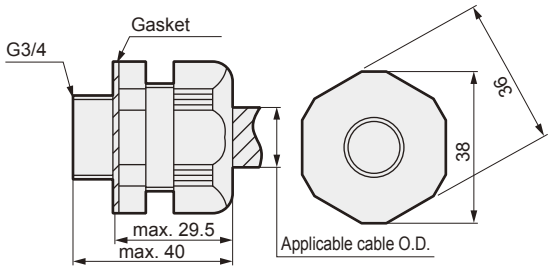

(Reference value)
Cable clamp body tightening torque : 4.0 to 4.5 N·m
Tightening cap tightening torque : 3.0 to 3.5 N·m

W4G - SCL-18A
Ⓐ Type

Ⓐ Type	
Symbol	**Thread size and applicable cable outer diameter**
SCL-18A	G3/4, ø14.5 to 16.5
SCL-18B	G3/4, ø16.5 to 18.5

For T6*

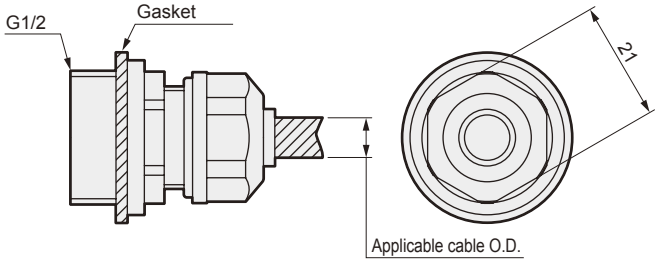

Applicable cable outer diameter : ø6 to ø8
(Reference value)
Cable clamp body tightening torque : 2.0 to 2.4 N·m
Tightening cap tightening torque : 0.5 to 0.7 N·m

W4G - OA-W1608C1
Ⓐ Type

Ⓐ Type	
Symbol	**Thread size and applicable cable outer diameter**
OA-W1608C1	G1/2, ø6 to 8

● Masking plate kit

W4G4-MP

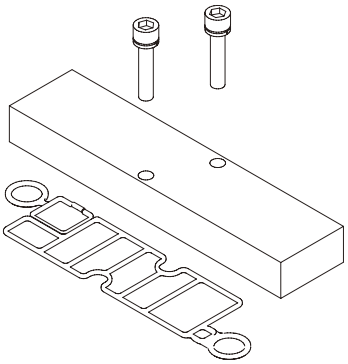

* Kit descriptions: Masking plate, gasket, 2 set screws

● Tie rod

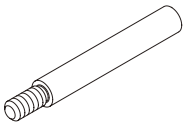

W4G4 - TR - V1
Ⓐ Type

Ⓐ Type	
V1	Valve block for 1 station
V2	Valve block for 2 stations

* 2 pcs. set

● Blanking plug

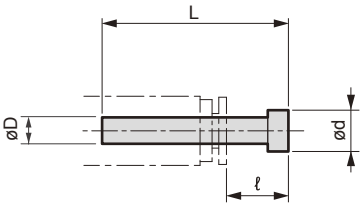

Model no.	D	L	ℓ	d
GWP8-B	ø8	33	14	10
GWP10-B	ø10	40	18.5	12
GWP12-B	ø12	43	20	14

● Partition plug

M4TB3-NC

When using partition plug, consult with CKD sales office.

● Fuse

4T9-LM20

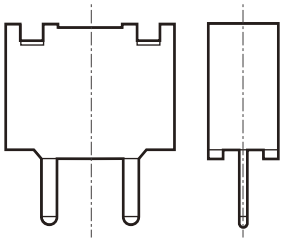

Related products

● Individual supply spacer

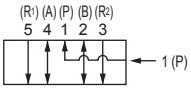

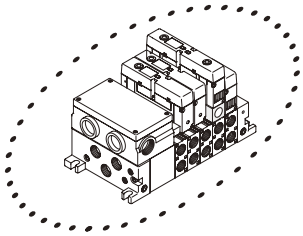

W4G4 - P - 08

Ⓐ Port size

Ⓐ Port size {1 (P) port }	
08	Rc1/4
10	Rc3/8
08G	G1/4
10G	G3/8
08N	NPT1/4
10N	NPT3/8

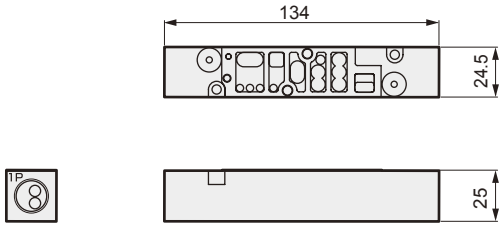

Dimensions when installed

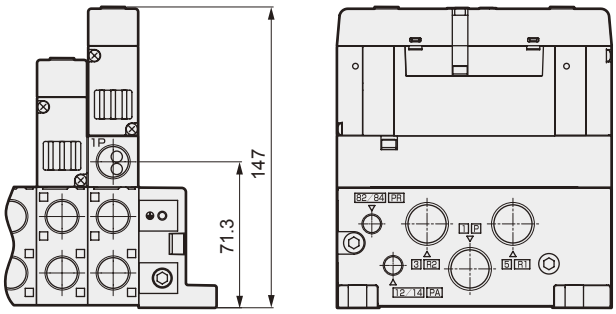

● Individual exhaust spacer

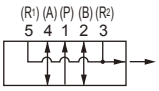

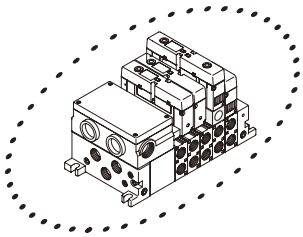

W4G4 - R - 08

Ⓐ Port size

Ⓐ Port size {3/5 (R) port }	
08	Rc1/4
10	Rc3/8
08G	G1/4
10G	G3/8
08N	NPT1/4
10N	NPT3/8

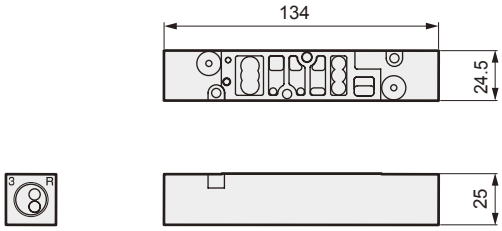

Dimensions when installed

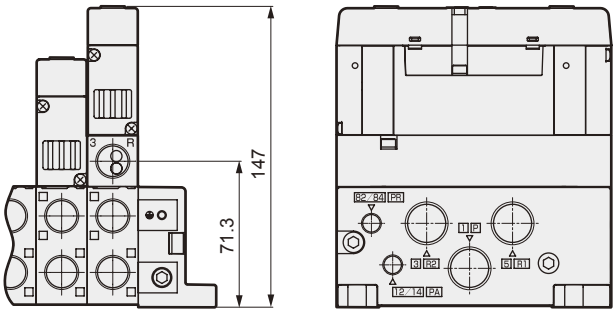

Note 1: When placing the exhaust spacers adjacently, make sure that the silencer does not interfere.

MN3E0
MN4E0
4GA/B
M4GA/B
MN4GA/B
4GA/B (Master)
W4GA/B2
W4GB4
MN3S0
MN4S0
4TB
4L2-4/ LMF0
4SA/B0
4SA/B1
4KA/B
4F
PV5G/ CMF
PV5/ CMF
3MA/B0
3PA/B
P/M/B
NP/NAP/ NVP
4F*0E
HMV HSV
2QV 3QV
SKH
PCD/ FS/FD
Ending

Internal structure and parts list

NW4GB410 Sub-base side porting

● 2-position single solenoid

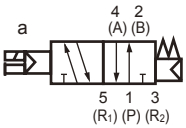

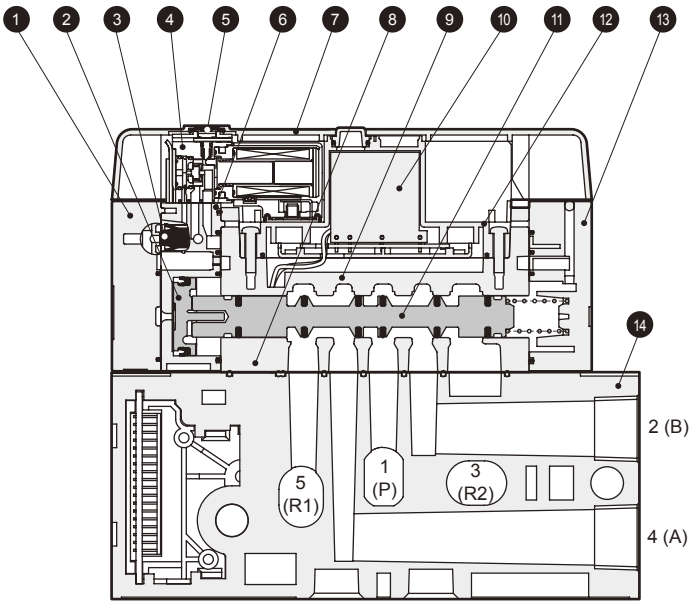

NW4GZ410 Sub-base back porting

* The solenoid valve is the same as NW4GB410.

● 2-position single solenoid

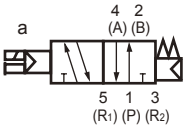

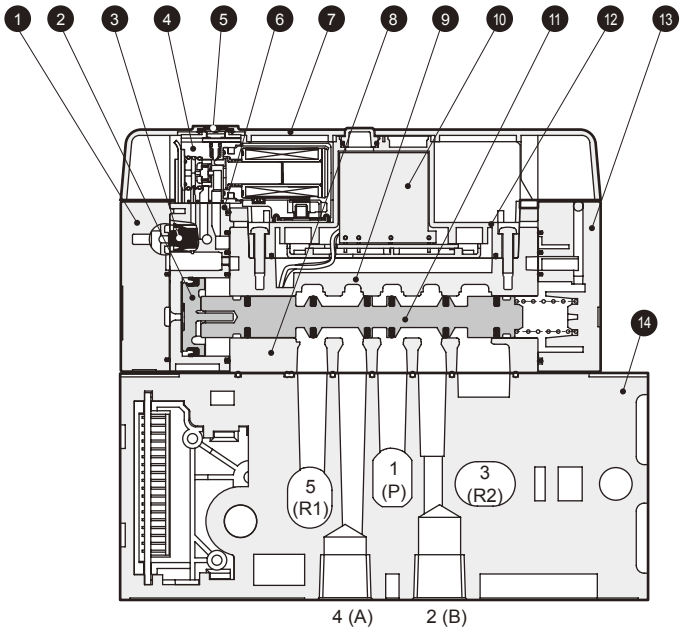

Main parts list

No.	Parts name	Material	No.	Parts name	Material
1	Cap D3	PA	8	Electric connector	-
2	Piston assembly	-	9	Body	Aluminum
3	Quick exhaust valve	H-NBR	10	Electric circuit board	-
4	Pilot valve	-	11	Spool assembly	-
5	Manual override	PBT	12	Drip proof guard	PBT
6	Pilot valve assembly SD	-	13	Cap S	PA
7	Cover	PBT	14	Valve block	Aluminum

Internal structure and parts list

W4GB410 Discrete Sub-base side porting

● 2-position single solenoid

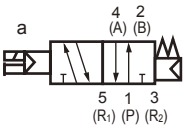

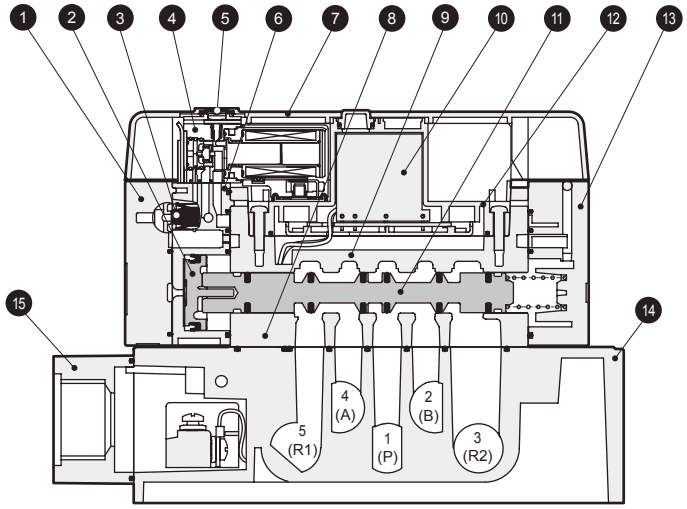

W4GZ410 Discrete Sub-base back porting

* The solenoid valve is the same as W4GB410.

● 2-position single solenoid

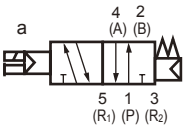

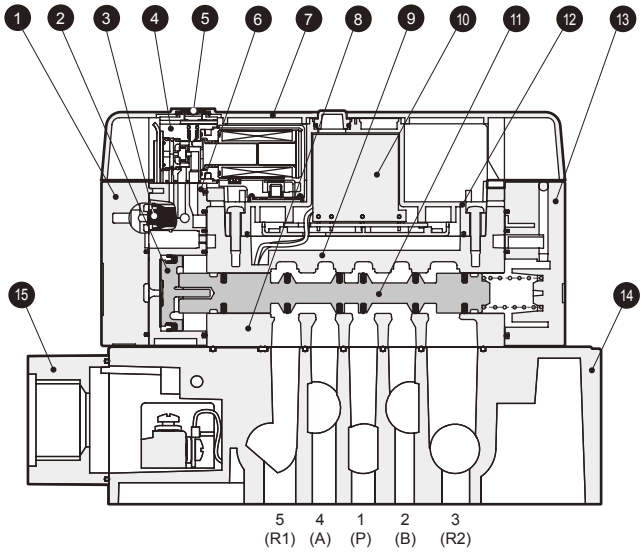

Main parts list

No.	Parts name	Material	No.	Parts name	Material
1	Cap D3	PA	9	Body	Aluminum
2	Piston assembly	-	10	Electric circuit board	-
3	Quick exhaust valve	H-NBR	11	Spool assembly	-
4	Pilot valve	-	12	Drip proof guard	PBT
5	Manual override	PBT	13	Cap S	PA
6	Pilot valve assembly SD	-	14	Discrete sub-base	Aluminum
7	Cover	PBT	15	Gland cover	PBT
8	Electric connector	-			

MN3E0
MN4E0
4GA/B
M4GA/B
MN4GA/B
4GA/B (Master)
W4GA/B2
W4GB4
MN3S0
MN4S0
4TB
4L2-4/ LMF0
4SA/B0
4SA/B1
4KA/B
4F
PV5G/ CMF
PV5/ CMF
3MA/B0
3PA/B
P/M/B
NP/NAP/ NVP
4F*0E
HMV HSV
2QV 3QV
SKH
PCD/ FS/FD
Ending

Internal structure and parts list

NW4G$^{B}_{Z}$420/W4GB420

● 2-position double solenoid

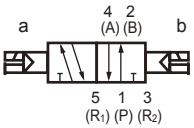

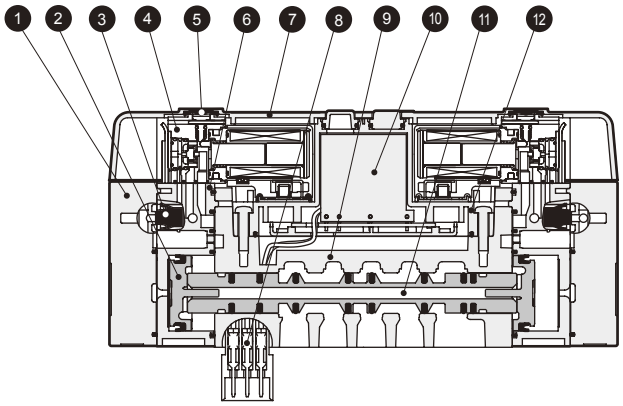

NW4G$^{B}_{Z}$4$^{3}_{4}_{5}$0/W4GB4$^{3}_{4}_{5}$0

● 3-position

All ports closed

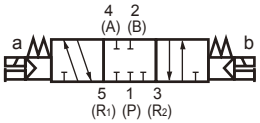

A/B/R connection

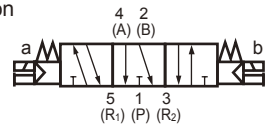

P/A/B connection

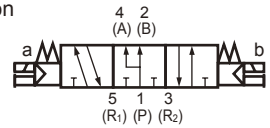

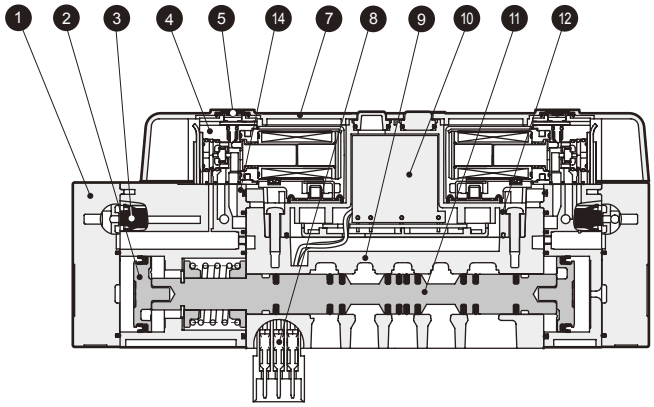

● With pilot air OFF function (M7)

* Fig. shows 2-position double solenoid.

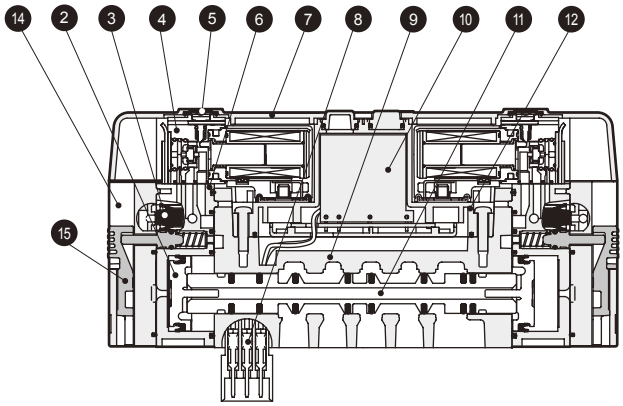

Main parts list

No.	Parts name	Material	No.	Parts name	Material
1	Cap D3	PA	9	Body	Aluminum
2	Piston assembly	-	10	Electric circuit board	-
3	Quick exhaust valve	H-NBR	11	Spool assembly	-
4	Pilot valve	-	12	Drip proof guard	PBT
5	Manual override	PBT	13	Cap S	PA
6	Pilot valve assembly SD	-	14	M7 cap	PA
7	Cover	PBT	15	M7 switch	PA
8	Electric connector	-			

MN3E0 MN4E0
4GA/B
M4GA/B
MN4GA/B
4GA/B (Master)
W4GA/B2
W4GB4
MN3S0 MN4S0
4TB
4L2-4/ LMF0
4SA/B0
4SA/B1
4KA/B
4F
PV5G/ CMF
PV5/ CMF
3MA/B0
3PA/B
P/M/B
NP/NAP/ NVP
4F*0E
HMV HSV
2QV 3QV
SKH
PCD/ FS/FD
Ending

Technical data (1) Pneumatics system selection guide

① The cylinder's average speed is based on the W4G4 Series and piping combination. It is expressed by the cylinder's piston speed obtained by dividing the stroke by the time the piston rod moved after starting, when the cylinder rod is installed facing upward. When the load rate is 50%, the average speed should be the approximate cylinder speed multiplied by 0.5.

② The average cylinder speed indicated in the pneumatic device selection catalog is the value when one cylinder is operated discretely.

③ The effective sectional area of the solenoid valve used for the calculation below is the 2-position value.

④ This selection guide is just reference. With the CKD sizing program, confirm conditions to be actually used.

⑤ Effective sectional area S and sonic conductance C are converted as S ≒ 5.0 x C.

Standard system table

Valve	System No.	Flow control valve	Silencer	Piping	Composite effective sectional area (mm^2) Pipe length 1m
W4GB410	C2	SC1-8	SLW-8A	ø10 x ø7.2	9.7
	C3	SC1-10	SLW-10A	ø15 x ø11.5	15.6

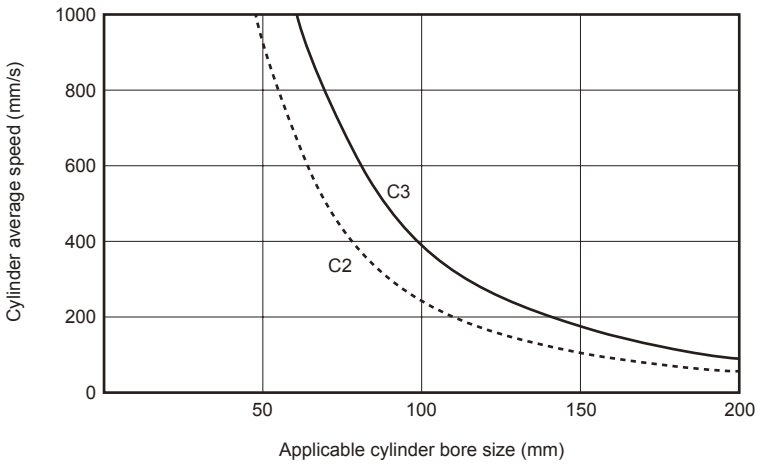

How to use guide

The device selection guide is used to select the optimum model.

● Selection of components to be driven

Wheth

Select the cylinder's theoretical reference speed using the table below as a reference.

Degree of cylinder speed	Theoretical reference speed (mm/s)
Low speed	250
Medium speed	500
High speed	750
Ultra high speed	1,000

Select the standard system No. appropriate fo

Explanation of technical terms

● Theoretical

the same as the no-load value.When load is applied, speed drops considerably.)

$$v\,o = 1920 \times \frac{S}{A}\ 2445 \times \frac{S}{D^2} \quad \text{———} (1)$$

$v\,o$: Theoretical reference speed (mm/s)
A : Cylinder cross-section areas (cm^2)
S : Composite effective sectional area of circuit (mm^2)
D : Cylinder bore size (cm)

Whe

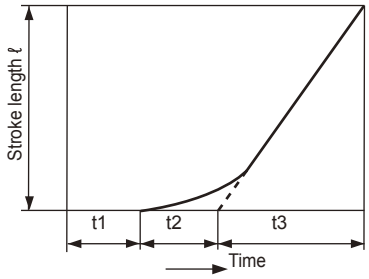

$$v\,o = \frac{\ell}{t3}\ (A/s)$$

t1 : Time until movement starts
t2 : Time of primary delay
t3 : Time during constant movement
ℓ : Stroke length

● Note: t1, t2 varies depending on the load.
It can be neglected when there is no load.

● Required flow rate: Momentary flow rate passed when the cylinder operates at *vo* speed. This is expressed with the equation below.
In the table, this is the value when P = 0.5 MPa. The required flow rate is that required for selecting the clean air system.

$$Q = \frac{A v\,o\,(P + 0.101) \times 60}{0.101 \times 10^4} = \left\{ \frac{A v\,o\,(P + 1.03) \times 60}{1.03 \times 10^4} \right\} \quad \text{———} (2)$$

Q : Required flow (RX) (ANR)
P : Supply pressure (MPa)

● Required effective sectional area: Composite effective sectional area for the exhaust circuit required for moving the cylinder at *vo* speed. (Composite effective sectional area of valve, speed controller, silencer and piping.)

● Appropriate standard system: A combination of the optimum valve, speed controller, silencer, and pipe diameter required to operate the cylinder at *vo* speed. The combination in the table is for a piping length of 1 m.

How to calculate flow

Shown as followings depending on the practical unit

Chalk flow when $\frac{P_2 + 0.1}{P_1 + 0.1} \leqq b$

$$Q = 600 \times C\,(P_1 + 0.1) \sqrt{\frac{293}{273 + t}} \quad \text{———} (1)$$

Subsonic flow when $\frac{P_2 + 0.1}{P_1 + 0.1} > b$

$$Q = 600 \times C\,(P_1 + 0.1) \sqrt{1 - \left[\frac{\frac{P_2 + 0.1}{P_1 + 0.1} - b}{1 - b} \right]^2} \sqrt{\frac{293}{273 + t}} \quad \text{———} (2)$$

Q : Air flow rate [dm^3/min(ANR)], SI unit dm^3 (cubic decimeter) is expressed with ℓ (liter). $1dm^3$ = 1 ℓ
C : The sonic conductance (dm^3/ (s·bar))
b : Critical pressure percent (-)
P_1 : Primary side pressure (MPa)
P_2 : Secondary side pressure (MPa)
t : Temperature (°C)

When calculating with effective sectional area S, substitute value C obtained with C = S/5 in the above equation.
For subsonic flow, substitute b = 0.5 in equation (2).

MN3E0 MN4E0
4GA/B
M4GA/B
MN4GA/B
4GA/B (Master)
W4GA/B2
W4GB4
MN3S0 MN4S0
4TB
4L2-4/ LMF0
4SA/B0
4SA/B1
4KA/B
4F
PV5G/ CMF
PV5/ CMF
3MA/B0
3PA/B
P/M/B
NP/NAP/ NVP
4F*0E
HMV HSV
2QV 3QV
SKH
PCD/ FS/FD
Ending

<Component selection guide-1>

Cylinder bore size (mm)	Theoretical reference speed (mm/s)	Required flow (ℓ/min.) (ANR)	Required effective sectional area (mm^2)	Proper standard system No. Silencer assembly exhaust
ø40	250	112	1.6	A
	500	224	3.3	B
	750	336	4.9	B
	1000	448	6.5	C1
ø50	250	175	2.6	A
	500	350	5.1	B
	750	526	7.7	C1
	1000	701	10.2	C2
ø63	250	278	4.1	B
	500	556	8.1	C2
	750	834	12.2	C2
	1000	1112	16.2	C3
ø80	250	448	6.5	C1
	500	897	13.1	C2
	750	1345	19.6	C3
	1000	1794	26.2	C4
ø100	250	701	10.2	C2
	500	1401	20.4	C3
	750	2102	30.7	C4
	1000	2803	40.9	D1
ø125	250	1095	16.0	C3
	500	1401	31.9	C4
	750	2102	47.9	D1
	1000	2803	63.9	D2

* Refer to page 564 for system No.

<Effective sectional area>

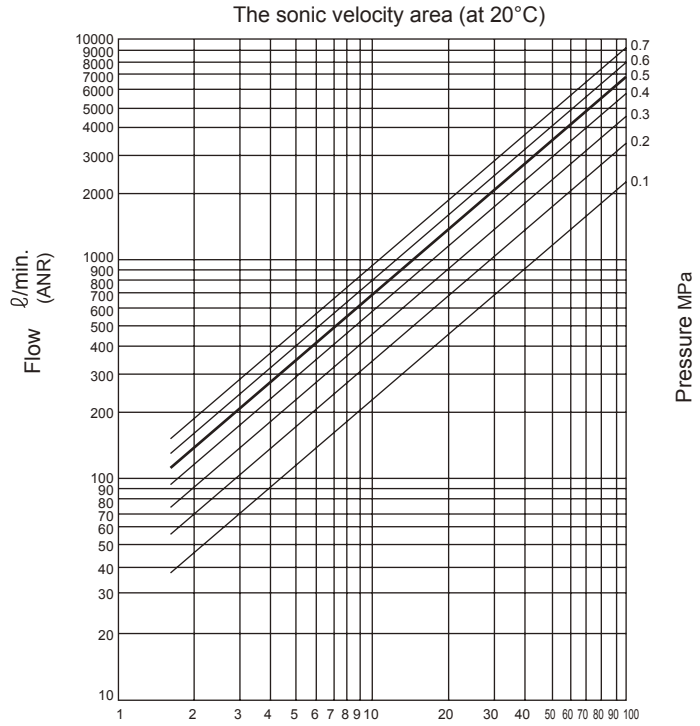

Effective sectional area mm^2

(When the effective sectional area value is $x10^{-1}$ or $x10^{n}$, multiply the flow rate value with the same value.)

<Clean air system components>

Clean air system components

Parts name	Model no.	Port size	Maximum flow rate (ℓ/min. atmospheric pressure conversion)
F.R.L. kit	C1000-6	Rc1/8	450
	C1000-8	Rc1/4	630
	C3000-8	Rc1/4	1280
	C3000-10	Rc3/8	1750
	C4000-8	Rc1/4	1430
	C4000-10	Rc3/8	2400
	C4000-15	Rc1/2	3000
F.R. unit	W1000-6	Rc1/8	830
	W1000-8	Rc1/4	1150
	W3000-8	Rc1/4	2150
	W3000-10	Rc3/8	2430
	W4000-8	Rc1/4	2500
	W4000-10	Rc3/8	4350
	W4000-15	Rc1/2	4750
Air filter (F)	F1000-6	Rc1/8	460
	F1000-8	Rc1/4	610
	F3000-8	Rc1/4	1230
	F3000-10	Rc3/8	1500
	F4000-8	Rc1/4	1320
	F4000-10	Rc3/8	2140
	F4000-15	Rc1/2	3000
Regulator (R)	R1000-6	Rc1/8	770
	R1000-8	Rc1/4	1350
	R3000-8	Rc1/4	2000
	R3000-10	Rc3/8	2600
	R4000-8	Rc1/4	2500
	R4000-10	Rc3/8	4400
	R4000-15	Rc1/2	5000
Lubricator (L)	L1000-6	Rc1/8	550
	L1000-8	Rc1/4	700
	L3000-8	Rc1/4	1100
	L3000-10	Rc3/8	2250
	L4000-8	Rc1/4	1000
	L4000-10	Rc3/8	1700
	L4000-15	Rc1/2	2700

Note) Max. flow rate: for FRL, FR and R, primary pressure=0.7 MPa, setting pressure=0.5 MPa and pressure drop=0.1MPa. For air filter, primary pressure=0.7 MPa, pressure drop=0.02 MPa, and for lubricator, primary pressure=0.5 MPa and pressure=0.03 MPa.

Common gland type (wiring method T10)

Notes when wiring

[Notes for common gland type (T10)]

① With the common gland, common wires are treated inside beforehand. When using the independent contact PLC output unit, wire the common at the contact section.
② Check the correspondence of the number of stations and solenoid positions to prevent incorrect wiring.
(Refer to the table below.)
③ This cannot be used if the number of solenoid points exceed 16.
④ Manifold station numbers are set in order from the left facing the piping port.
⑤ The voltage could drop because of simultaneous energizing or the cable length. Confirm that the voltage drop for the solenoid is within 10% of the rated voltage.

Internal wiring of wiring method T10 (up to 16 solenoids)

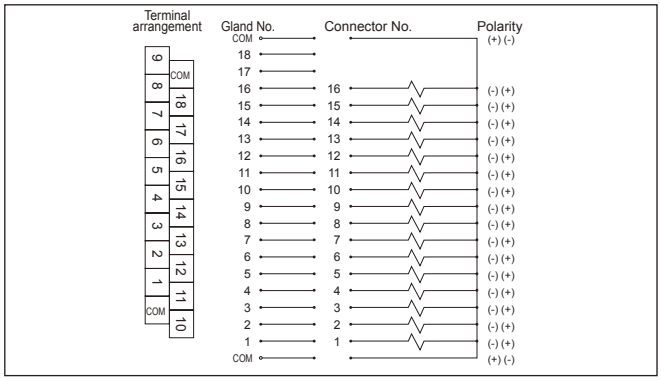

T10 (Left)

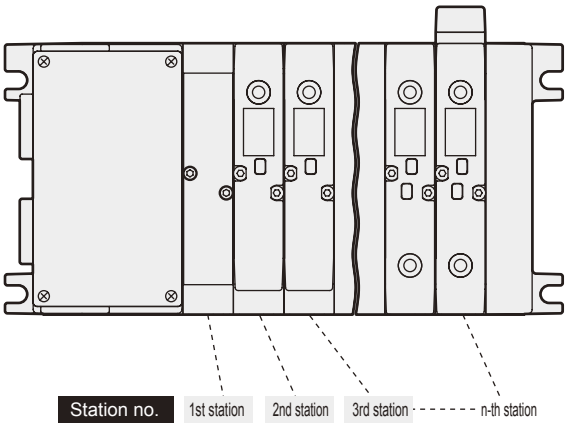

T10R (Right)

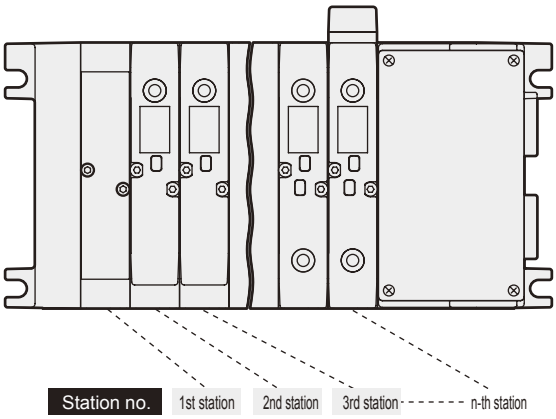

Terminal array of wiring method T10 (example)

* : The numbers in the valve No. 1a, 1b, 2a, 2b and so forth indicate the first station and 2nd station. The alphabetic characters a and b indicate the a side solenoid and the b side solenoid.
The max. no. of manifold stations differs based on the model.
Check the individual specifications.

Terminal No.

COM	18	17	16	15	14	13	12	11	10
9	8	7	6	5	4	3	2	1	COM

(Standard wiring)

● For single solenoid valve

(MF station number; up to 16 stations)

Gland No.	COM	18	17	16	15	14	13	12	11	10
Valve No.	COM	(Void)	(Void)	16a	15a	14a	13a	12a	11a	10a
Gland No.	9	8	7	6	5	4	3	2	1	COM
Valve No.	9a	8a	7a	6a	5a	4a	3a	2a	1a	COM

● For double solenoid valve

(MF station number; up to 8 stations)

Gland No.	COM	18	17	16	15	14	13	12	11	10
Valve No.	COM	(Void)	(Void)	8b	8a	7b	7a	6b	6a	5b
Gland No.	9	8	7	6	5	4	3	2	1	COM
Valve No.	5a	4b	4a	3b	3a	2b	2a	1b	1a	COM

● Mix
(Single and double mixture)

(Up to 16 solenoids)

Gland No.	COM	18	17	16	15	14	13	12	11	10
Valve No.	COM	(Void)	(Void)	(Void)	(Void)	9b	9a	8b	8a	7b
Gland No.	9	8	7	6	5	4	3	2	1	COM
Valve No.	7a	6a	5b	5a	4b	4a	3a	2a	1a	COM

(Double wiring)

(MF station number; up to 16 stations)

Gland No.	COM	18	17	16	15	14	13	12	11	10
Valve No.	COM	(Void)	(Void)	(Void)	8a	(Void)	7a	(Void)	6a	(Void)
Gland No.	9	8	7	6	5	4	3	2	1	COM
Valve No.	5a	(Void)	4a	(Void)	3a	(Void)	2a	(Void)	1a	COM

(MF station number; up to 8 stations)

Gland No.	COM	18	17	16	15	14	13	12	11	10
Valve No.	COM	(Void)	(Void)	8b	8a	7b	7a	6b	6a	5b
Gland No.	9	8	7	6	5	4	3	2	1	COM
Valve No.	5a	4b	4a	3b	3a	2b	2a	1b	1a	COM

(Up to 16 solenoids)

Gland No.	COM	18	17	16	15	14	13	12	11	10
Valve No.	COM	(Void)	(Void)	8b	8a	7b	7a	(Void)	6a	5b
Gland No.	9	8	7	6	5	4	3	2	1	COM
Valve No.	5a	4b	4a	(Void)	3a	(Void)	2a	(Void)	1a	COM

Serial transmission type (wiring method T6*)

Notes when wiring

[Notes for serial transmission type (T6*)]

① The slave station output number differs with the manufacturer, but connector pin numbers in the manifold and manifold solenoids correspond as shown below.
② Internal connectors are wired in order, so depending on the number of manifold stations there may be open output numbers. These open outputs are used only for purposes other than driving the solenoid valve manifold being used.
③ The working power is 24 VDC dedicated.
④ Use the slave station for each communication system.
Refer to technical data on page 569 for the specifications on the usable PLC models, host unit models and communication systems.
⑤ Manifold station numbers are set in order from the left facing the piping port regardless of the wiring block position.
⑥ Contact the PLC manufacturer for information on the PLC.

T6* (Left)

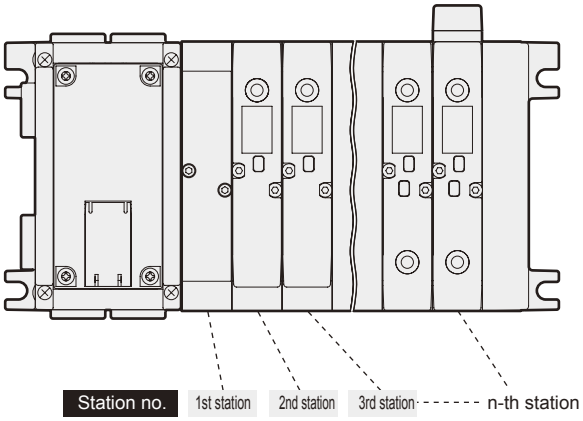

T6*R (Right)

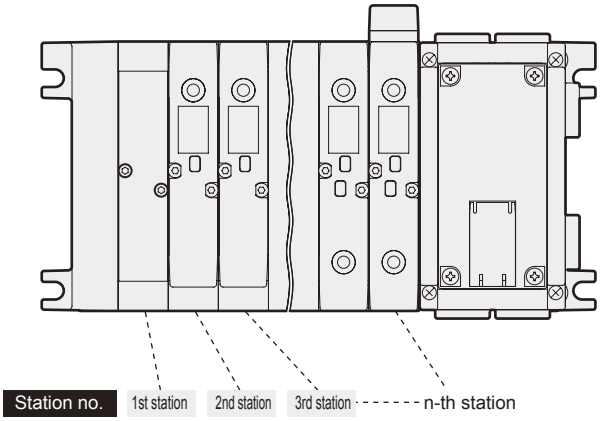

Relations between connector pin No. and solenoid valve

● For single solenoid valve
(Available up to 16 stations)

Pin No.	2	4	6	8	10	12	14	16
Valve No.	2a	4a	6a	8a	10a	12a	14a	16a
Pin No.	1	3	5	7	9	11	13	15
Valve No.	1a	3a	5a	7a	9a	11a	13a	15a

● For double solenoid valve
(Available up to 8 stations)

Pin No.	2	4	6	8	10	12	14	16
Valve No.	1b	2b	3b	4b	5b	6b	7b	8b
Pin No.	1	3	5	7	9	11	13	15
Valve No.	1a	2a	3a	4a	5a	6a	7a	8a

● For mix (single and double mixture)
(Available up to 16 solenoids)

Pin No.	2	4	6	8	10	12	14	16
Valve No.	2a	4a	6a	7b	8b	9b	10b	11b
Pin No.	1	3	5	7	9	11	13	15
Valve No.	1a	3a	5a	7a	8a	9a	10a	11a

*1:The numbers in the valve No. 1a, 1b, 2a, 2b and so forth indicate the first station and 2nd station. The alphabetic characters a and b indicate the a side solenoid and the b side solenoid.

Relations between slave unit output number and connector pin No.

● T6A1, T6D1, T6J1, T6G1, T6C1

Output number	0	1	2	3	4	5	6	7	8	9	10	11	12	13	14	15
Connector pin No.	1	2	3	4	5	6	7	8	9	10	11	12	13	14	15	16

PLC table

Model no.	Maker name (recommended body)	Series	Communication system name	Host station model no.
T6A1	UNIWIRE	Compatible with each PLC, PC and SBC Consult with CKD for details.	UNIWIRE SYSTEM	Connect to SEND UNIT (UW-SD-120) or various UNIWAIRE interface
T6D1	OMRON	SYSMAC CS Series SYSMAC CJ Series SYSMAC CV Series SYSMAC α Series SYSMAC C2000HS Series Others	DeviceNet	CS1W-DRM21 CJ1W-DRM21 CVM1-DRM21-V1 C200HW-DRM21-V1 ITNC-EI*01-DRM (master integrated PLC) 3G8B3-DRM21 (VME board)
	TOYODA	PC3J/2J Series PC3JD PC2F/PC2FS		THK-5398 TIC-5642 (master integrated PLC) TFU-5359
	ODVA	Each company's DeviceNet compatible PLC, PC and SBC		Connect to each maker's DeviceNet compatible master
T6G1	MITSUBISHI	MELSEC A Series MELSEC QnA Series MELSEC Q Series	CC-Link	AJ61BT11 AJ61QBT11 A1SJ61BT11 A1SJ61QBT11 QJ61BT11 (N)
	CC-Link institution (CLPA)	PLC, PC compatible with each CC-Link brand		Connect to each maker's CC-Link master
T6J1	UNIWIRE H SYSTEM	Compatible with each PLC, PC Consult with CKD for details.	UNIWIRE H SYSTEM	Connect to SEND UNIT (UW-SD-H2) or various H SYSTEM interface
T6C1	OMRON	CPM2C Series SYSMAC CJ Series SYSMAC C200HS SYSMAC α C200HX/HG/HE SYSMAC CS Series SYSMAC CQM1H/CQM1	CompoBus/S	CPM2C-S100C CPM2C-S110C CPM2C-S100C-DRT CPM2C-S110C-DRT CJ1W-SRM21 C200HW-SRM21-V1 CQM1-SRM21-V1

Note: Contact each PLC maker for information on the PLC and for series names or PLC names which are not listed.

Wiring between wiring block and valve block (DC specifications)

A part called a dedicated wiring connector is incorporated in the valve block and supply and exhaust port, etc. With this structure, the wiring is completed when the block manifold is disassembled or assembled. No special wiring is required during disassembly or assembly. There is a regularity between wiring block connector pin numbers and wired valves, so check wiring for each wiring block, and connect between the valve and control unit. Pay special attention when expanding or reducing the number of valve blocks. An example of the wiring circuit for expansion is shown below.

Wiring example of circuit

The figure below is an example for the MW4G4 wiring circuit, and differs from actual specifications.

Double wiring

If one valve block is added between the second and third stations, the outputs assigned to No. 5 and No. 6 on the wiring block's common gland are automatically shifted to common gland No. 7 and No. 8, two solenoid places away.

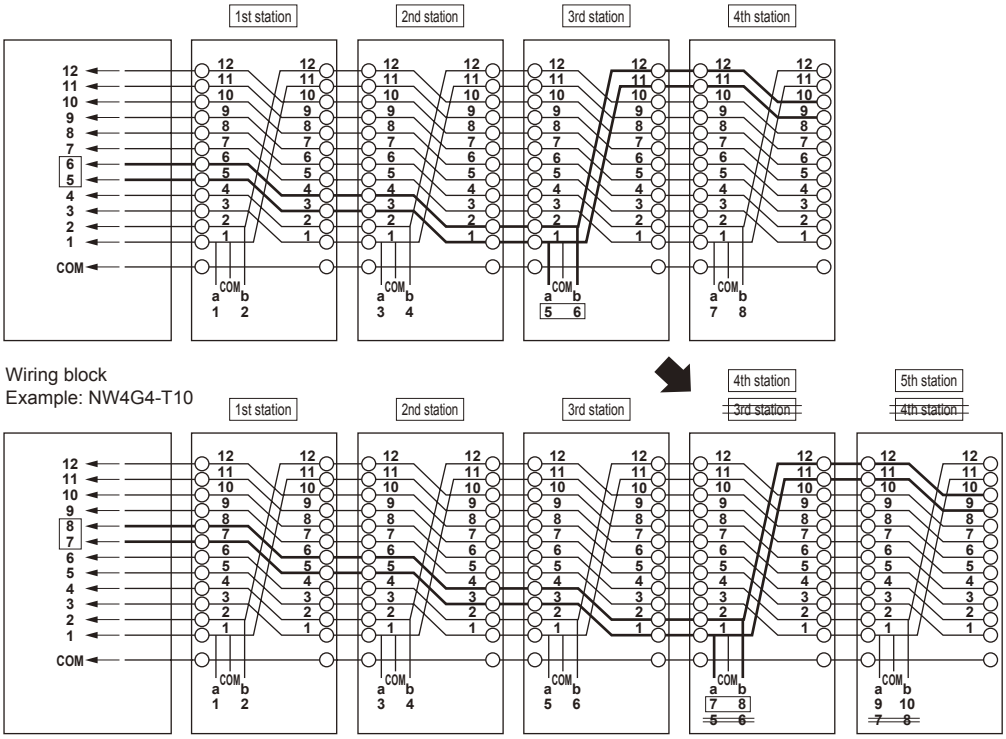

Standard wiring

The same as for double wiring, the common gland number is shifted and assigned. Shifting differs with the solenoid valve.
When using one solenoid (2-position single), the common gland number shifts by one solenoid space. When using two solenoids (2-position double, 3-position), numbers are shifted by two solenoid spaces.

Deal drawing of block manifold

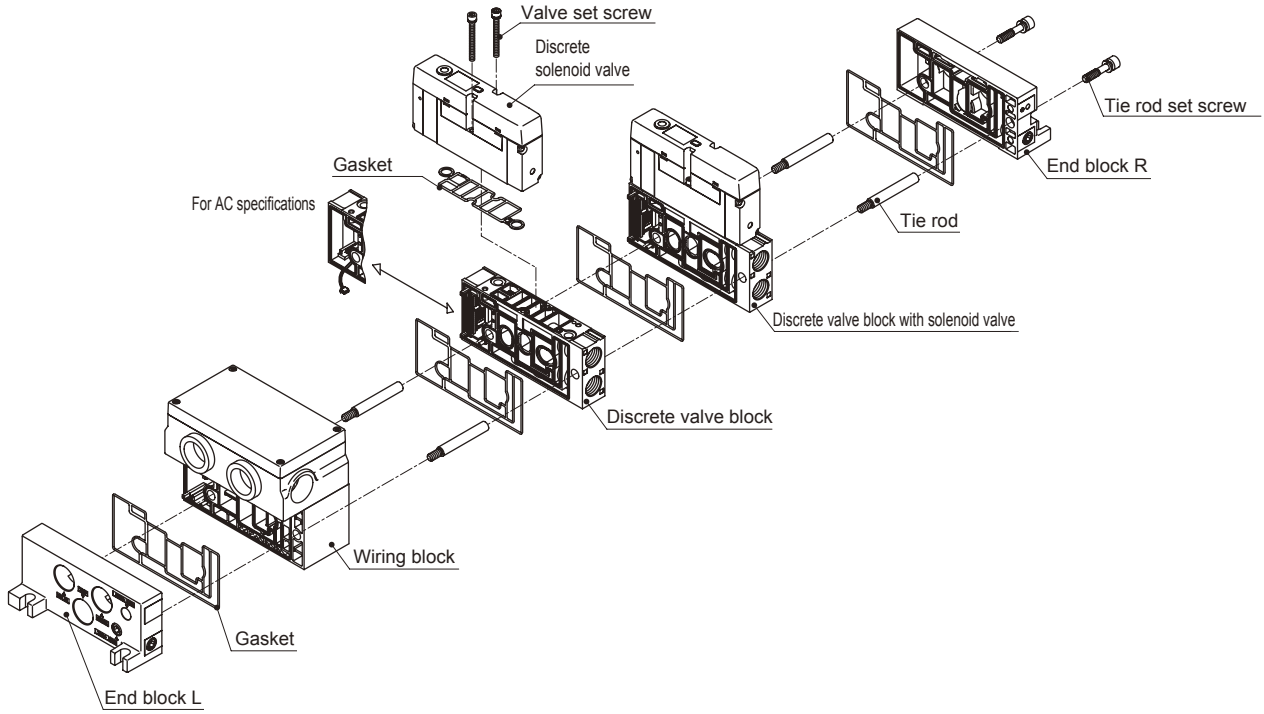

Example of disassembling: For MW4GB4 common gland left wiring specifications

Removing electric cover

T10/T10R

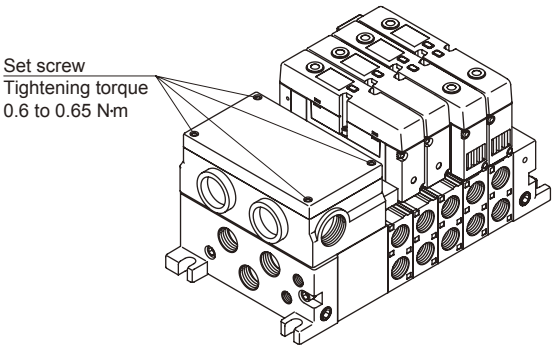

T6*/T6*R

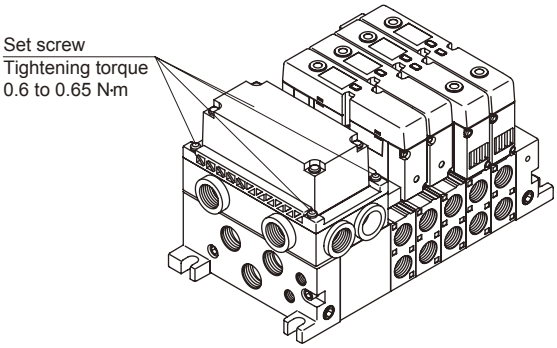

Valve block expansion

① Remove tie rod set screw.
② Remove the blocks to the position to be expanded.
③ Mount the tie-rod for expansion.
④ Install valve blocks to be added.
⑤ Eliminate clearance between blocks, and couple with a hexagon socket head bolt. (Tightening torque: 7.0 to 8.0 N·m)

Replace of valve

How to remove

① Loosen the two set screws.
② Remove the valve from the valve block.

How to install

Install the valve following removal procedures in reverse.

Refer to the table below for the set screw's recommended tightening torque.

Recommended tightening torque of valve set screw

	size	Recommended tightening torque (N·m)
W4G4	M4	2.4 to 2.6

Technical data (3) How to expand reduced wiring manifold

Connection procedure of T10 electric circuit board (standard wiring)

Correspondence rules for connectors installed on the electric circuit board and valve differ with reduced wiring specifications (T10). When wiring the connector, always confirm the connector No. printed on the electric circuit board.

Mixed wiring is shown as an example for the manifold configuration below.

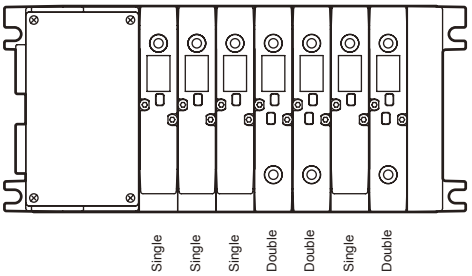

T10

Electric circuit board assembly

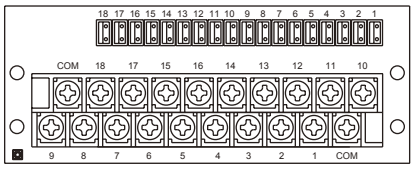

Wire solenoids as allow order.

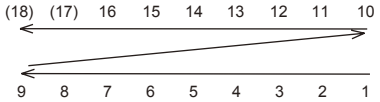

Relations to valves

1) For single SOL
(MF station number; up to 16 stations)

Connector No.	COM	18	17	16	15	14	13	12	11	10
Valve No.	COM	(Void)	(Void)	16a	15a	14a	13a	12a	11a	10a
Connector No.	9	8	7	6	5	4	3	2	1	COM
Valve No.	9a	8a	7a	6a	5a	4a	3a	2a	1a	COM

2) For double SOL
(MF station number; up to 8 stations)

Connector No.	COM	18	17	16	15	14	13	12	11	10
Valve No.	COM	(Void)	(Void)	8b	8a	7b	7a	6b	6a	5b
Connector No.	9	8	7	6	5	4	3	2	1	COM
Valve No.	5a	4b	4a	3b	3a	2b	2a	1b	1a	COM

3) For mix manifold
(Up to 16 solenoids)

Connector No.	COM	18	17	16	15	14	13	12	11	10
Valve No.	COM	(Void)	(Void)	(Void)	(Void)	(Void)	(Void)	(Void)	(Void)	7b
Connector No.	9	8	7	6	5	4	3	2	1	COM
Valve No.	7a	6a	5b	5a	4b	4a	3a	2a	1a	COM

*1: Wiring is required only when expanding AC specifications.
*2: Use the valve block with masking plate as a reserved block if specifications will be changed for AC specifications.

Connection procedure of T10 electric circuit board (double wiring)

When using double wiring specifications, double solenoid wiring is used regardless of the installed solenoid valve's switching position class. The same wiring is used only for standard wiring and double wiring double SOL.

T10

Electric circuit board assembly

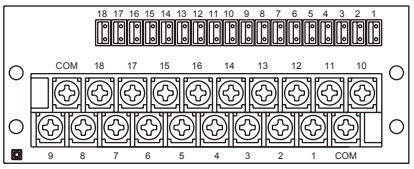

Wire solenoids as allow order.

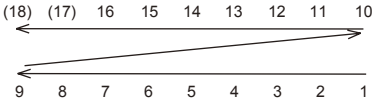

Relations to valves

1) For single SOL
(MF station number; up to 8 stations)

Connector No.	COM	18	17	16	15	14	13	12	11	10
Valve No.	COM	(Void)	(Void)	(Void)	8a	(Void)	7a	(Void)	6a	(Void)
Connector No.	9	8	7	6	5	4	3	2	1	COM
Valve No.	5a	(Void)	4a	(Void)	3a	(Void)	2a	(Void)	1a	COM

2) For double SOL
(MF station number; up to 8 stations)

Connector No.	COM	18	17	16	15	14	13	12	11	10
Valve No.	COM	(Void)	(Void)	8b	8a	7b	7a	6b	6a	5b
Connector No.	9	8	7	6	5	4	3	2	1	COM
Valve No.	5a	4b	4a	3b	3a	2b	2a	1b	1a	COM

3) For mix manifold
(Up to 16 solenoids)

Connector No.	COM	18	17	16	15	14	13	12	11	10
Valve No.	COM	(Void)	(Void)	(Void)	(Void)	7b	7a	(Void)	6a	5b
Connector No.	9	8	7	6	5	4	3	2	1	COM
Valve No.	5a	4b	4a	(Void)	3a	(Void)	2a	(Void)	1a	COM

How to fill out manifold specifications

● Manifold model no. (example)

2 solenoid position types and over | Port size Rc3/8 | Common gland left specifications

MW 4 GB4 8 0- 10 - T10 W M - 6 - 3

Ⓐ Model no. Ⓑ Solenoid position Ⓒ Port size Ⓓ Wiring method Ⓔ Terminal and connector pin array Ⓕ Option Ⓖ Station number Ⓗ Voltage

• Select the type from the "Block part configuration" (pages 552 to 559), or pages 539, 544, or 545 when completing this form.

Parts name		Model no.	Installation position 1	2	3	4	5	6	7	8	9	10	11	12	13	14	15	16	Quantity
	End block (P.555)	NW4G4-E L	○																1
	End block (P.555)	NW4G4-E R									○								1
	Wiring block (P.557)	NW4G4-T 10		○	Station no. : 1st station														1
	Valve block with solenoid valve (P.539, 544, 545)	NW4GB4 1 0- 10 - M - 3			○														1
	Valve block with solenoid valve (P.539, 544, 545)	NW4GB4 2 0- 10 - M - 3				○	○	○	○	Station no. : 6th station									4
	Valve block with solenoid valve (P.539, 544, 545)	NW4GB4 3 0- 10 - M - 3								○									1
	Valve block with solenoid valve (P.539, 544, 545)	NW4GB4 0- - -																	
	Valve block with solenoid valve (P.539, 544, 545)	NW4GB4 0- - -																	
	Valve block with masking plate (P.554)	NW4GB4-MP - -																	
	Valve block with masking plate (P.554)	NW4GB4-MP - -																	
Spacers (P.559)	Individual supply spacer	W4G4-P-																	
Spacers (P.559)	Individual exhaust spacer	W4G4-R-																	
Other	Partition plug (P.558)	M4TB3-NCP																	
Other	Partition plug (P.558)	M4TB3-NCR																	2 x
Accessories	Silencer (resin)	SLW-15A	Indicate the quantity in the Quantity field on the right.																
Accessories	Blanking plug	GWP8-B																	
Accessories	Blanking plug	GWP10-B																	
Accessories	Blanking plug	GWP12-B																	
Accessories	Cable clamp (P.558)	W4G-																	

Preparing the manifold specifications

- ● Complete from the left end, with the piping port facing forward.
  (Indicate the block type selected from the block part components (pages 552 to 559) and the layout instructions.)
- ● Indicate the total number of blocks designated in the required quantity on the right of the table.
- ● Circle the required accessories.
- ● Manifold specifications are available for individual series, so fill out corresponding specifications.

MW4GB4 (sub-base side porting)·····Page 576
MW4GZ4 (sub-base back porting)·····Page 577

When using partition plug, consult with CKD sales office.

How to fill out wiring specifications sheet

Not required for standard wiring and double wiring

● Wiring specifications (example)

* The following example is completed based on the previous page's manifold specifications.

Connector pin or gland No.		Valve No.															
T10	**T6***	1	2	3	4	5	6	7	8	9	10	11	12	13	14	15	16
1	1		a														
2	2		b														
3	3	a															
4	4																
5	5			a													
6	6			b													
7	7				a												
8	8				b												
9	9					a											
10	10					b											
11	11						a										
12	12						b										
13	13																
14	14																
15	15																
16	16																
COM																	
COM																	

● Notes of wiring specifications

① Prepare these specifications for applications other than standard wiring or double wiring, and enclose with manifold specifications.
Please consult with CKD because wiring will be handled as a custom order.

② Valve numbers are assigned only to valve blocks from the left facing the port.
Note that numbers differ from installation position numbers.

③ The valve block with a masking plate is wired beforehand.
Wiring is provided only for the a side when indicated as "-MPS" and on a and b sides when indicated as "-MPD."

④ The double solenoid or 3-position solenoid valve cannot be assembled onto "-MPS."
Prepare a valve block with a solenoid valve and increase stations for this type of application.
Refer to page 571 for details on expanding.

⑤ Reserved wiring for expansion cannot be installed beforehand. Install the valve block with masking plate.

References circuit diagram

This is the circuit diagram from the manifold (example) on the previous page.

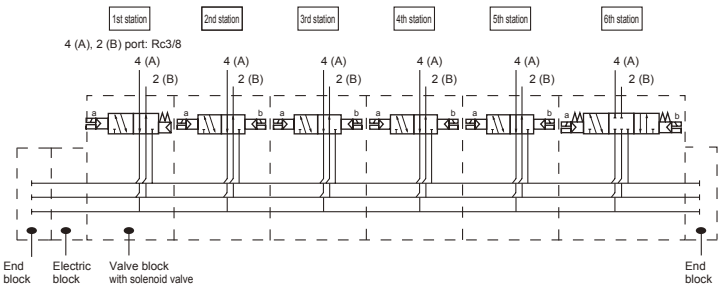

- The dotted box indicates each block's part configuration.
- Manifold station numbers are set in order from the left facing the piping port.
  (*Wiring and end blocks are not included in manifold stations.)
- Select the model from the block configurations (pages 552 to 559), individual wiring manifold and reduced wiring manifold (pages 539, 544, 545).
- The layout position is set in order from the left facing the piping port.

MW4GB4 block manifold specifications

● Contact ● Quantity Set ● Request date / /

Issue / / /

Slip No.	Order No.

Your company name

Contact

Order No.

● Manifold model no.

MW4GB4 [ ] **0-** [ ] **-** [ ] [ ] [ ] **-** [ ] **-** [ ]

Ⓐ Model no. Ⓑ Solenoid position Ⓒ Port size Ⓓ Wiring method Ⓔ Terminal and connector pin array Ⓕ Option Ⓖ Station number Ⓗ Voltage

• Select the type from the "Block part configuration" (pages 552 to 559), or pages 539, 544, or 545 when completing this form.

Parts name		Model no.	Installation position 1	2	3	4	5	6	7	8	9	10	11	12	13	14	15	16	Quantity
	End block (P.555)	NW4G4-E [ ]																	
		NW4G4-E [ ]																	
	Wiring block (P.557)	NW4G4-T [ ]																	
	Valve block with solenoid valve (P.539, 544, 545)	NW4GB4 [ ] 0- [ ] - [ ] - [ ]																	
		NW4GB4 [ ] 0- [ ] - [ ] - [ ]																	
		NW4GB4 [ ] 0- [ ] - [ ] - [ ]																	
		NW4GB4 [ ] 0- [ ] - [ ] - [ ]																	
		NW4GB4 [ ] 0- [ ] - [ ] - [ ]																	
	Valve block with masking plate (P.554)	NW4GB4-MP [ ] - [ ] - [ ]																	
		NW4GB4-MP [ ] - [ ] - [ ]																	
Spacers (P.559)	Individual supply spacer	W4G4-P- [ ]																	
	Individual exhaust spacer	W4G4-R- [ ]																	
Other	Partition plug (P.558)	M4TB3-NCP																	
		M4TB3-NCR																	2 x
Accessories	Silencer (resin)	SLW-15A	Indicate the quantity in the Quantity field on the right.																
	Blanking plug	GWP8-B																	
		GWP10-B																	
		GWP12-B																	
	Cable clamp (P.558)	W4G- [ ]																	

● Wiring specifications (Not required for standard wiring and double wiring.)

Connector pin or gland No.		Valve No.															
T10	**T6***	1	2	3	4	5	6	7	8	9	10	11	12	13	14	15	16
1	1																
2	2																
3	3																
4	4																
5	5																
6	6																
7	7																
8	8																
9	9																
10	10																
11	11																
12	12																
13	13																
14	14																
15	15																
16	16																
COM																	
COM																	

MW4GZ4 block manifold specifications

● Contact ● Quantity Set ● Request date / /

Slip No.	Order No.

Issue / /

Your company name

Contact

Order No.

● Manifold model no.

MW4GZ4 [ ] **0-** [ ] **-** [ ] [ ] [ ] **-** [ ] **-** [ ]

Ⓐ Model no. Ⓑ Solenoid position Ⓒ Port size Ⓓ Wiring method Ⓔ Terminal and connector pin array Ⓕ Option Ⓖ Station number Ⓗ Voltage

• Select the type from the "Block part configuration" (pages 552 to 559), or pages 539, 544, or 545 when completing this form.

Parts name		Model no.	Installation position 1	2	3	4	5	6	7	8	9	10	11	12	13	14	15	16	Quantity
	End block (P.555)	NW4G4-E [ ]																	
		NW4G4-E [ ]																	
	Wiring block (P.557)	NW4G4-T [ ]																	
	Valve block with solenoid valve (P.539, 544, 545)	NW4GZ4 [ ] 0- [ ] - [ ] - [ ]																	
		NW4GZ4 [ ] 0- [ ] - [ ] - [ ]																	
		NW4GZ4 [ ] 0- [ ] - [ ] - [ ]																	
		NW4GZ4 [ ] 0- [ ] - [ ] - [ ]																	
		NW4GZ4 [ ] 0- [ ] - [ ] - [ ]																	
	Valve block with masking plate (P.554)	NW4GZ4-MP [ ] - [ ] - [ ]																	
		NW4GZ4-MP [ ] - [ ] - [ ]																	
Spacers (P.559)	Individual supply spacer	W4G4-P- [ ]																	
	Individual exhaust spacer	W4G4-R- [ ]																	
Other	Partition plug (P.558)	M4TB3-NCP																	
		M4TB3-NCR																	2 x
Accessories	Silencer (resin)	SLW-15A	Indicate the quantity in the Quantity field on the right.																
	Blanking plug	GWP8-B																	
		GWP10-B																	
		GWP12-B																	
	Cable clamp (P.558)	W4G- [ ]																	

● Wiring specifications (Not required for standard wiring and double wiring.)

Connector pin or gland No.		Valve No.															
T10	**T6***	1	2	3	4	5	6	7	8	9	10	11	12	13	14	15	16
1	1																
2	2																
3	3																
4	4																
5	5																
6	6																
7	7																
8	8																
9	9																
10	10																
11	11																
12	12																
13	13																
14	14																
15	15																
16	16																
COM																	
COM																	